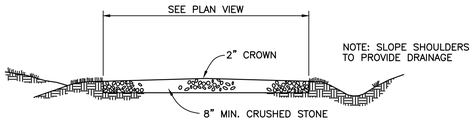

TYPICAL SECTION

PARKING AREA & DRIVE DETAIL

NOT TO SCALE

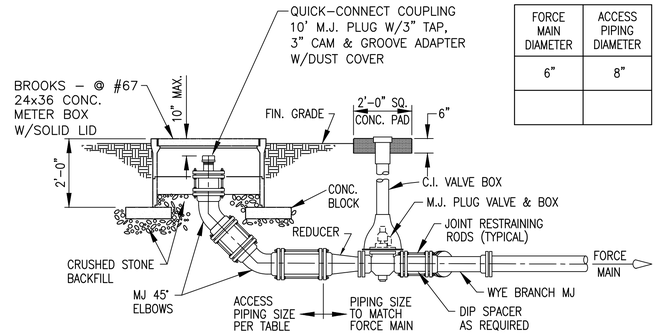

FORCE MAIN DIAMETER	ACCESS PIPING DIAMETER
6"	8"

NOTE:
JOINT RESTRAINTS SHALL BE PROVIDED BY TWO 3/4" THREADED RODS BETWEEN EACH FITTING

EMERGENCY CONNECTION ASSEMBLY

NOT TO SCALE

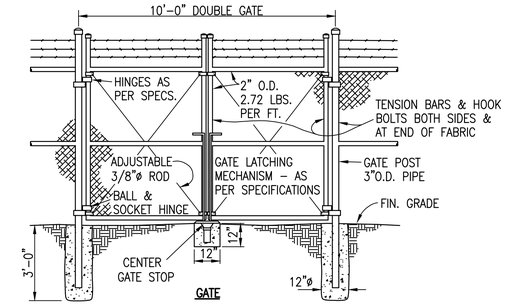

GATE

ALL POSTS & OTHER APPURTENANCES SHALL BE HOT DIP GALVANIZED W/MIN. 2.0 O.S.F. ZINC. ALL FITTINGS SHALL BE MALLABLE CAST IRON OR PRESSED STEEL.

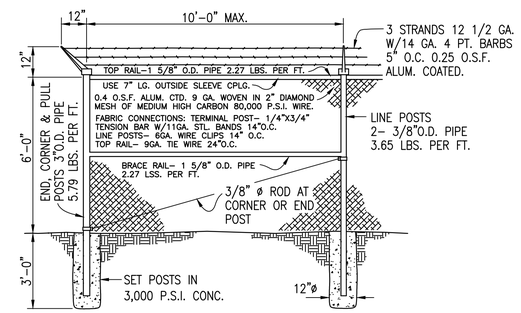

FENCE DETAIL

NOT TO SCALE

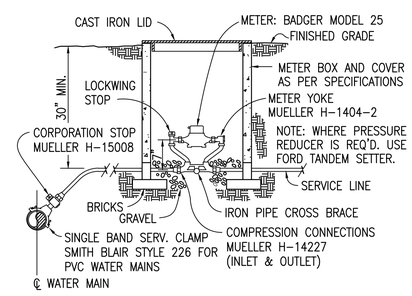

WATER METER INSTALLATION AND SERVICE LINE CONNECTION

NOT TO SCALE

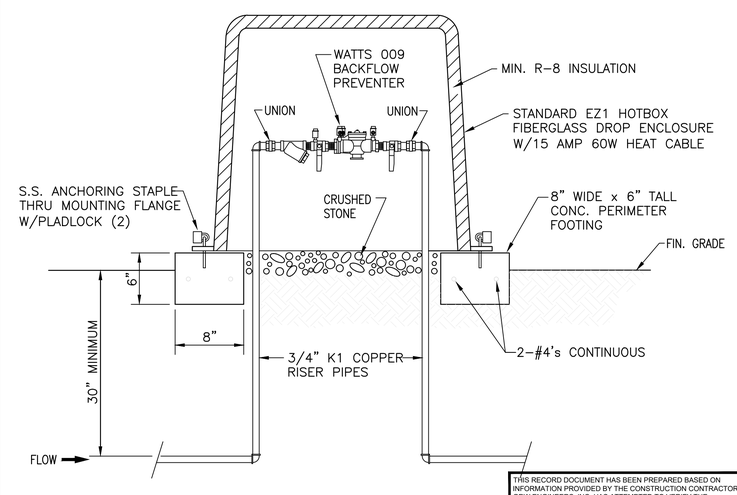

BACKFLOW PREVENTER w/ABOVE GROUND ENCLOSURE

NOT TO SCALE

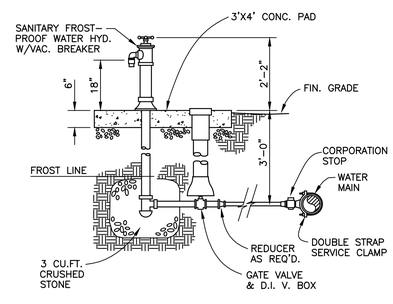

YARD HYDRANT DETAIL

NOT TO SCALE

THIS RECORD DOCUMENT HAS BEEN PREPARED BASED ON INFORMATION PROVIDED BY THE CONSTRUCTION CONTRACTOR. GRW ENGINEERS, INC. HAS ATTEMPTED TO VERIFY THE ACCURACY AND/OR COMPLETENESS OF THIS INFORMATION BUT SHALL NOT BE RESPONSIBLE FOR ANY ERRORS OR OMISSIONS WHICH MAY BE INCORPORATED HEREIN AS A RESULT.

engineering | architecture | geospatial
www.grwinc.com

ENGINEER/ARCHITECT: GRW ENGINEERS, INC
CONSTRUCTION COMPANY: Norris Bros Exca,LLC
DATE: DEC 10 2019

"AS-BULIT" DRAWINGS

RECORD DRAWINGS

GRW PROJECT NO. 4691-01

ALL RIGHTS RESERVED
THIS DOCUMENT IS THE PROPERTY OF GRW ENGINEERS, INC. AND SHALL NOT BE REPRODUCED IN WHOLE OR IN PART OR USED FOR ANY PURPOSE OR PROJECT OTHER THAN THIS SPECIFIC PROJECT WITHOUT WRITTEN PERMISSION.

engineering | architecture | geospatial
www.grwinc.com

SEWAGE PUMP STATION SITE DETAILS

I-40 INDUSTRIAL PARK SITE - 8" FORCE MAIN
INDUSTRIAL DEVELOPMENT BOARD OF PERRY CO., TENNESSEE

DESIGNED:	DRAWN:	REVIEWED:	APPROVED:
JWH	SH	JWH	JWH

REVISIONS

NO.	DESCRIPTION	DATE	BY

SCALE CHECK: THIS MARK SHOULD MEASURE EXACTLY 1" WHEN PLOTTED

DATE: OCTOBER 2018

SCALE: AS NOTED

SHEET NO. G-04

PLOTTED BY: NAzad

PRINTED: 12/10/2019 @ 11:17AM

FILE NAME: G:\4691-Perry Co.Ind\01-San Sewer\Working Drawings\RECORD DWGS\4691-01_G-04.dwg