SERVICE CONNECTION NOT UNDER ROADWAY LUMP SUM BID ITEM INCLUDES:

1. METER BOX INSTALLATION AND APPURTENANCES
2. WATER MAIN CONNECTION AND APPURTENANCES

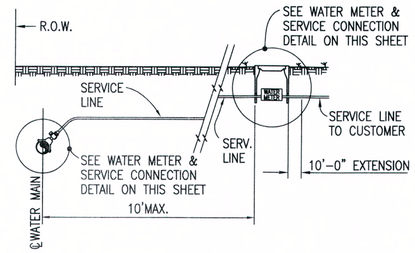

TYPE "A"
SERVICE CONNECTION NOT UNDER ROADWAY
NOT TO SCALE

SERVICE CONNECTION UNDER ROADWAY LUMP SUM BID ITEM INCLUDES:

1. METER BOX INSTALLATION AND APPURTENANCES
2. BORE & JACK UNDER ROADWAY W/PVC CASING PIPE AND SERVICE LINE
3. WATER MAIN CONNECTION AND APPURTENANCES

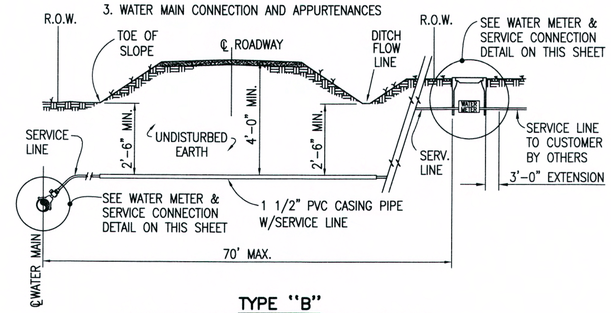

TYPE "B"
SERVICE CONNECTION UNDER ROADWAY
NOT TO SCALE

NOTES:

1. STANDARD OBLONG PLASTIC METER BOX – CARSON TRUSS T LINE – OR APPROVED EQUAL.
2. METER BOX SHALL BE 24" MINIMUM DEPTH.
3. WHERE PRESSURE REGULATOR IS REQUIRED USE FORD TANDEM SETTER WITH METER BOX SIZED TO FIT. AS MANUF. BY POLY PLASTIC WATER METER BOX CO. – OR APPROVED EQUAL.

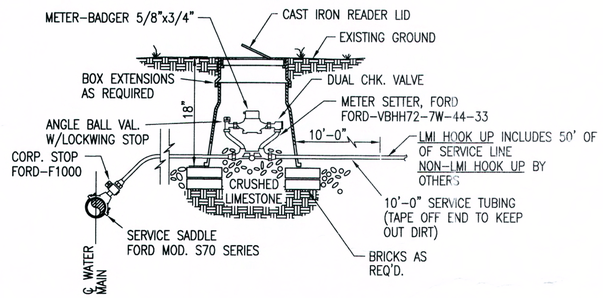

WATER METER INSTALLATION AND SERVICE LINE CONNECTION
NOT TO SCALE

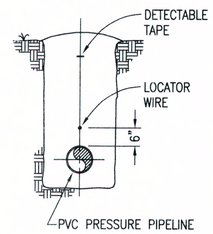

DETECTABLE WIRE DETAIL
NOT TO SCALE

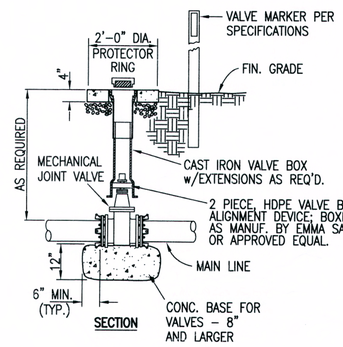

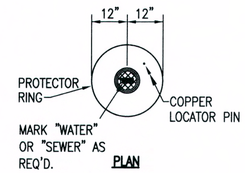

NOTES:

1. USE PRECAST CONC. PROTECTOR RING w/INTEGRAL COPPER LOCATOR PIN, AS MANUF. BY ROSS CONSTRUCTION OR APPROVED EQUAL, FOR VALVES OUTSIDE PAVED AREAS.
2. PLACE GROUT IN SPACE BETWEEN CONCRETE PAD AND VALVE BOX.
3. VALVES IN ROADWAY DO NOT REQUIRE A CONCRETE PAD OR MARKER.
4. VALVES SHALL BE RESTRAINED WITH MEGALUG TYPE RESTRAINT SYSTEM.

VALVE SETTING DETAIL
NOT TO SCALE

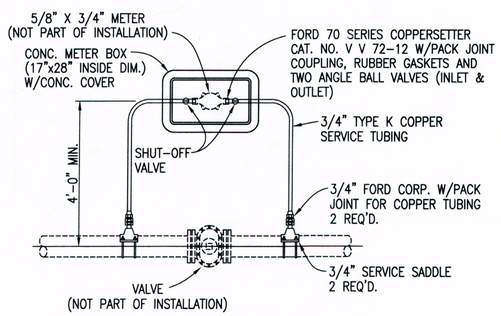

TEST METER BY–PASS INSTALLATION
NOT TO SCALE

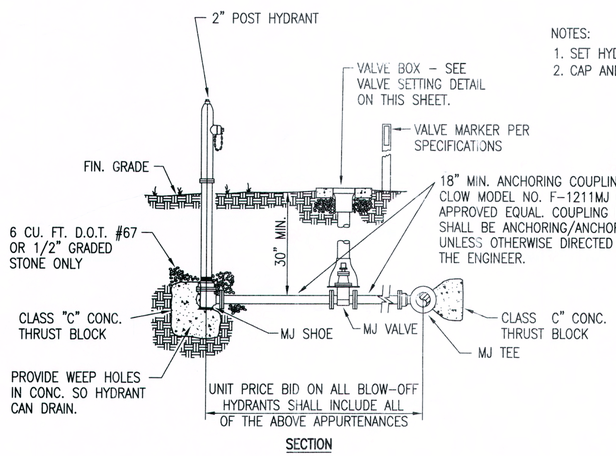

NOTES:

1. SET HYDRANT 12' TO 15' OFF EDGE OF PAVEMENT (MIN.).
2. CAP AND BLOCK TEE FOR END OF LINE APPLICATIONS.

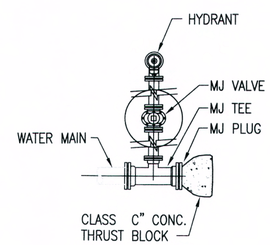

BLOW–OFF HYDRANT INSTALLATION
NOT TO SCALE

NOTES:

1. THE CONTRACTOR SHALL MAKE PROVISIONS TO GIVE ADEQUATE SPACE FOR AIR RELEASE APPURTENANCES (SEE SHOP DRAWINGS).
2. 17"x28" CONC. METER BOX – AS MANUF. BY BROOKS PRODUCTS, INC. MEMPHIS, TN – OR APPROVED EQUAL.
3. SEAL SLOTS IN METER BOX W/NON–SHRINK GROUT.
4. ALL ACCESSORY VALVES AND PIPING SHALL BE BRASS.

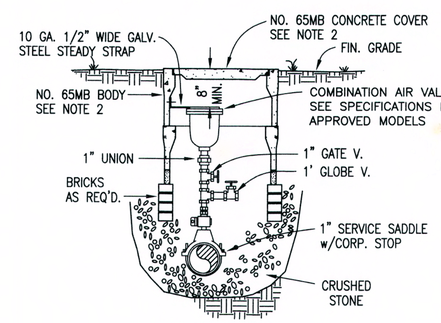

COMBINATION AIR VALVE
NOT TO SCALE

BARRY L. CLOWER REGISTERED ENGINEER AGRICULTURE 24 APR 2016 100893 STATE OF TENNESSEE

CONTRACT DRAWINGS

GRW PROJECT NO. 4420-01

ALL RIGHTS RESERVED. THIS DOCUMENT IS THE PROPERTY OF GRW ENGINEERS, INC. AND SHALL NOT BE REPRODUCED OR TRANSMITTED, OR BE USED FOR CONSTRUCTION IN WHOLE OR IN PART OTHER THAN THIS SPECIFIC PROJECT WITHOUT WRITTEN PERMISSION.

GRW engineering | architecture | geospatial
www.grwinc.com

STANDARD WATER LINE DETAILS

LOST CREEK RD. & RUSSELL CREEK RD. WATER LINES
CITY OF LOBELVILLE, TENNESSEE

DESIGNED:	BLC
DRAWN:	DM
REVIEWED:	BLC
APPROVED:	BLC

REVISIONS

NO.	DESCRIPTION	DATE	BY

SCALE CHECK — THIS MARK SHOULD MEASURE EXACTLY 1" WHEN PLOTTED

DATE: OCTOBER 2015

SCALE: AS NOTED

SHEET NO. SD-10

PLOTTED BY: dwmorris

PRINTED: 3/15/2016 @ 9:20AM

FILE NAME: G:\4420-Lobelville\01-Russell Lost\Working Drawings\AutoCAD\4420-01-SD-10.dwg