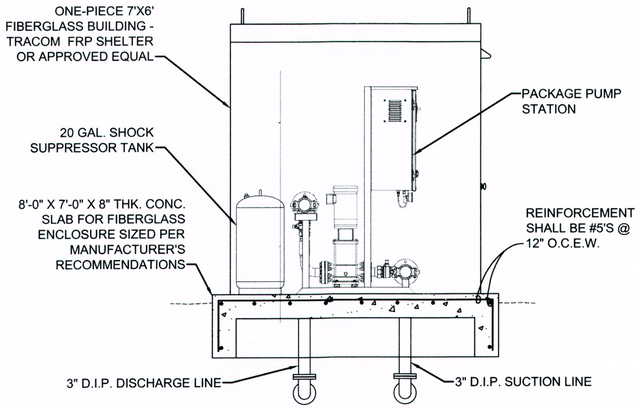

1 SECTION
SCALE: 1/2"=1'-0"

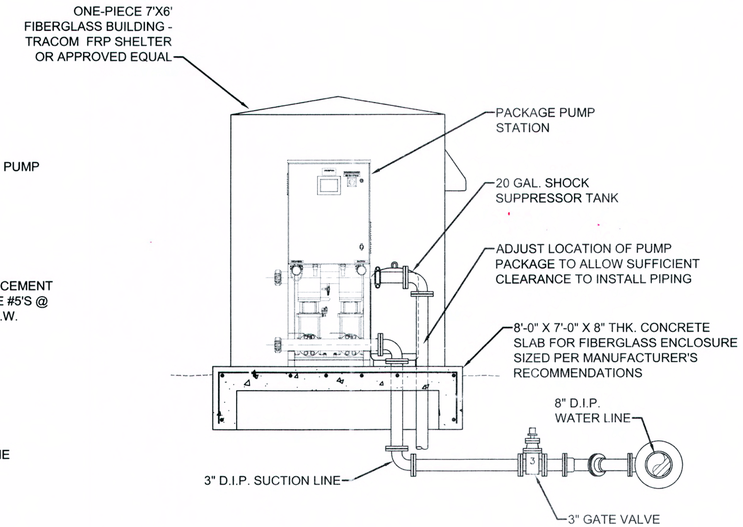

2 SECTION
SCALE: 1/2"=1'-0"

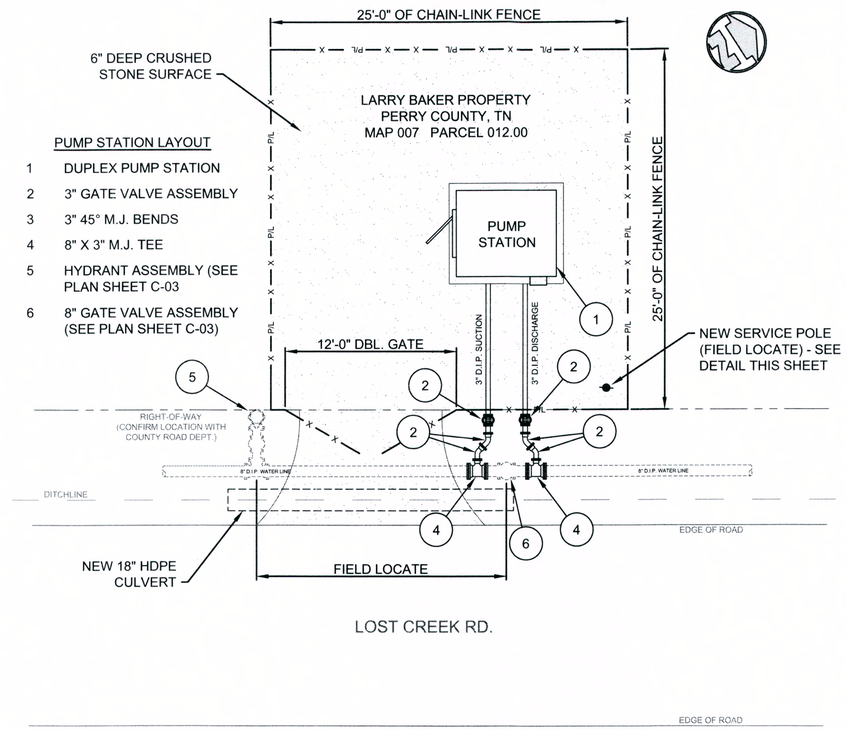

PUMP STATION LAYOUT

1 DUPLEX PUMP STATION
2 3" GATE VALVE ASSEMBLY
3 3" 45° M.J. BENDS
4 8" X 3" M.J. TEE
5 HYDRANT ASSEMBLY (SEE PLAN SHEET C-03
6 8" GATE VALVE ASSEMBLY (SEE PLAN SHEET C-03)

SITE PLAN
SCALE: 1"=5'-0"

NOTE: PUMP STATION ASSEMBLY IS PART OF DEDUCT NO. 1. HYDRANT ASSEMBLY AND 8" GATE VALVE ARE NOT PART OF DEDUCT NO. 1.

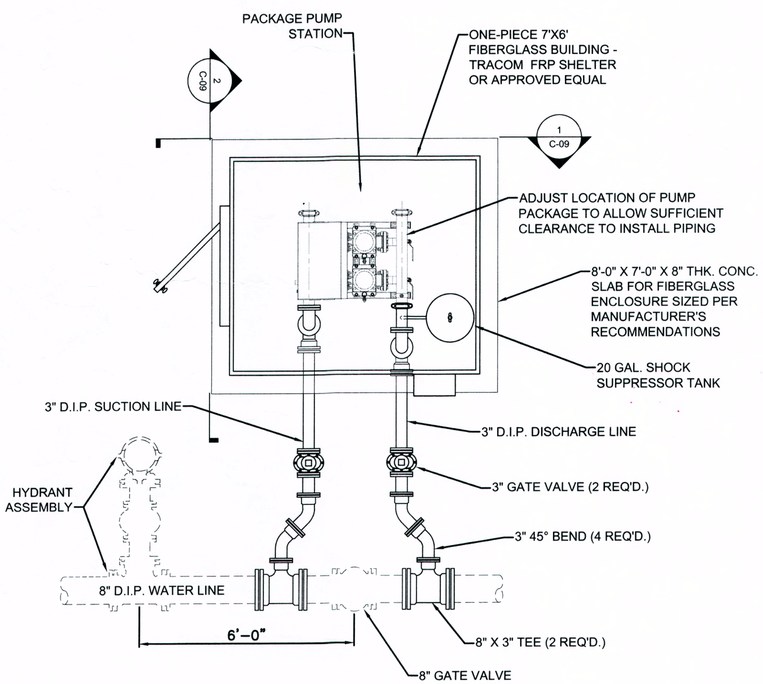

PLAN VIEW
PUMP STATION
SCALE: 1/2"=1'-0"

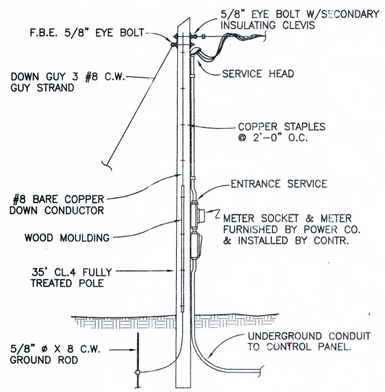

SERVICE ENTRANCE RISER POLE
NOT TO SCALE

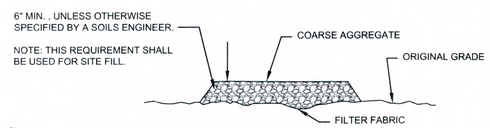

SECTION A-A

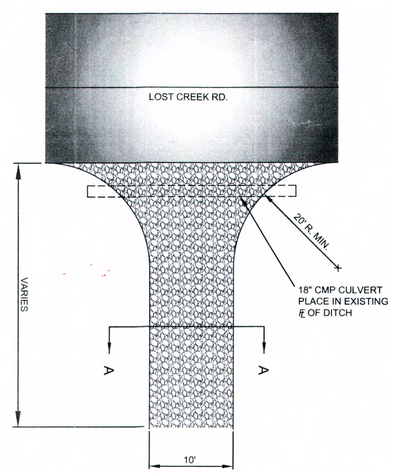

PLAN VIEW
PUMP STATION ACCESS ENTRANCE
N.T.S.

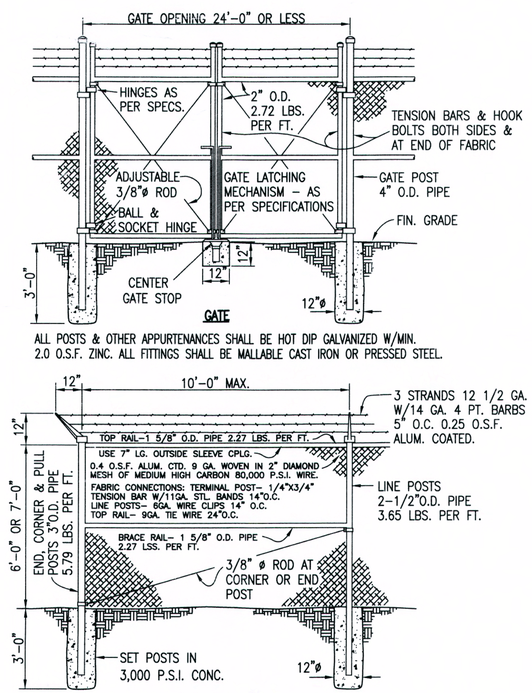

FENCE DETAIL
NOT TO SCALE

CONTRACT DRAWINGS

GRW PROJECT NO. 4420-01

ALL RIGHTS RESERVED
THIS DOCUMENT IS THE PROPERTY OF GRW ENGINEERS, INC. AND SHALL NOT BE REPRODUCED, DISTRIBUTED, OR USED FOR CONSTRUCTION OF ANY PROJECT OTHER THAN THE PROJECT WITHOUT WRITTEN PERMISSION.

engineering | architecture | geospatial
www.grwinc.com

PUMP STATION
PLAN, SECTIONS AND DETAILS
LOST CREEK RD. & RUSSELL CREEK RD. WATER LINES
CITY OF LOBELVILLE, TENNESSEE

DESIGNED:	BLC
DRAWN:	DM
REVIEWED:	BLC
APPROVED:	BLC

REVISIONS

NO.	DESCRIPTION	DATE	BY

THIS MARK SHOULD MEASURE EXACTLY 1" WHEN PLOTTED
SCALE CHECK:

DATE: OCTOBER 2015
SCALE: AS NOTED
SHEET NO. C-09

PLOTTED BY: dwmorris
PRINTED: 3/15/2016 @ 9:19AM
FILE NAME: G:\4420-Lobelville\01-Russell Lost\Working Drawings\AutoCAD\4420-01-C-09.dwg