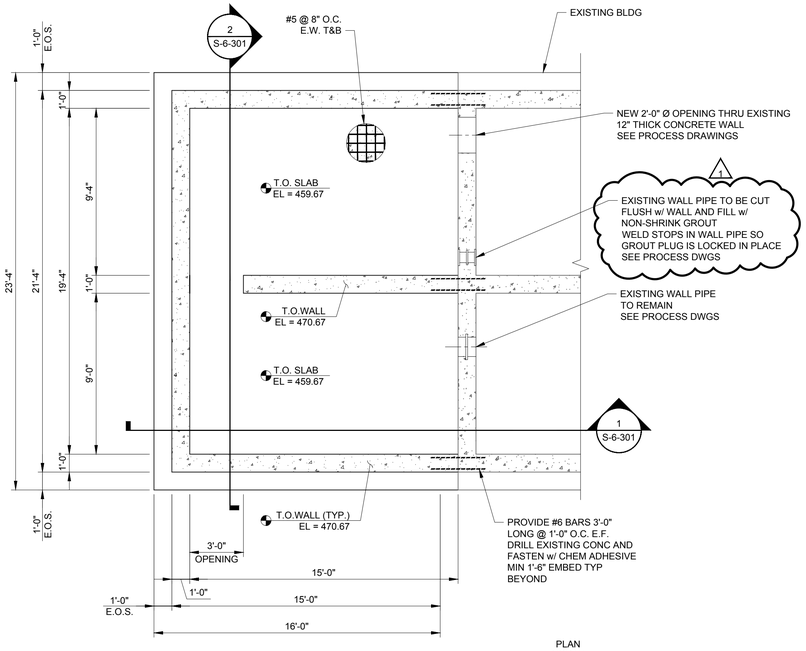

CLEARWELL FOUNDATION PLAN

SCALE: 1/4"=1'-0"

PLAN NORTH

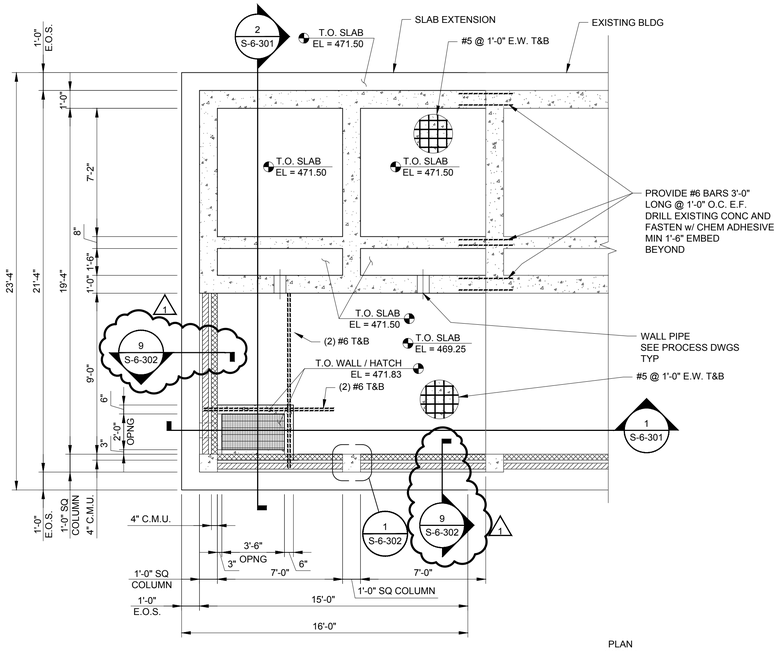

FIRST FLOOR FRAMING PLAN

SCALE: 1/4"=1'-0"

PLAN NORTH

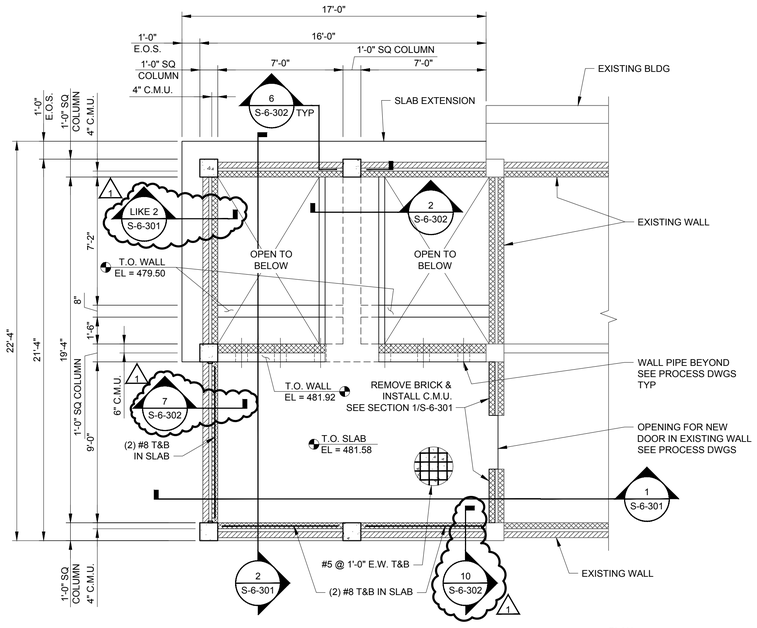

SECOND FLOOR FRAMING PLAN

SCALE: 1/4"=1'-0"

PLAN NORTH

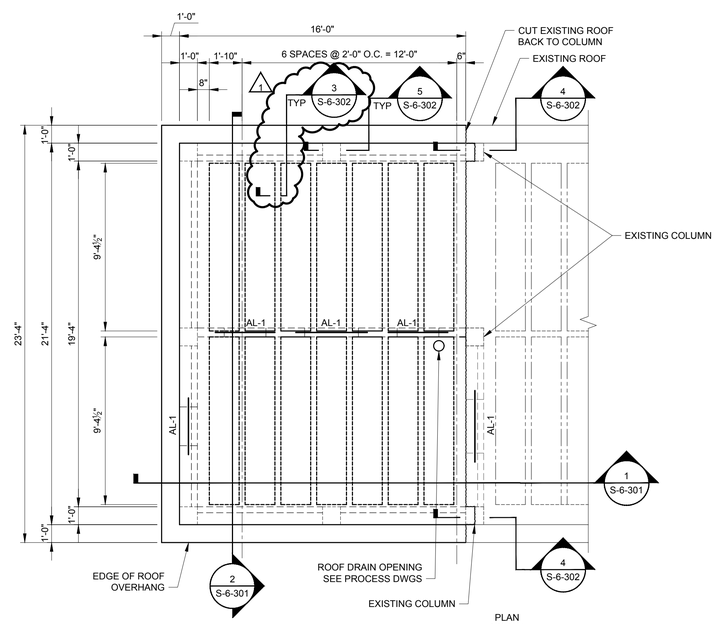

ROOF FRAMING PLAN

SCALE: 1/4"=1'-0"

NOTE:
SEE S-0-002 FOR LINTEL SCHEDULE AND DETAILS.

FILTER BUILDING ADDITION DESIGN CRITERIA

WIND LOAD DATA
COMPONENTS AND CLADDING WIND DESIGN PRESSURES
ROOF LOADS (At = 100 S.F.)

INTERIOR ZONE 1	-33 PSF
PERIMETER ZONE 2	-33 PSF
CORNER ZONE 3	-18 PSF
WALL LOADS (At =100 S.F.)	
INTERIOR ZONE 4	-19 PSF
CORNER ZONE 5	-21 PSF

ROOF LOADS

ROOF LIVE LOAD	20 PSF MIN
ROOF DEAD LOAD	100 PSF
ROOF SNOW LOAD	
GROUND SNOW LOAD	Pg = 10 PSF
SNOW EXPOSURE FACTOR	Ce = 1.0
THERMAL FACTOR	Ct = 1.0
IMPORTANCE FACTOR	Is = 1.10
FLAT ROOF SNOW LOAD (Pf = 0.7CeCtIsPg)	Pf = 7.70 PSF
MIN LOW SLOPE SNOW LOAD (Pm = I Pg)	Pm = 11.00 PSF
SLOPE ROOF SNOW LOAD (Ps = CsPf)	Ps = 7.70 PSF
RAIN ON SNOW SURCHARGE (Pr = Ps + 5)	Pr = 12.70 PSF
DRIFTS ADDED TO Pf AS APPLICABLE	

FLOOR LOADS

FLOOR LIVE LOAD	100 PSF
FLOOR DEAD LOAD	
SLAB	125 PSF
FLOOR COLLATERAL DEAD LOAD	10 PSF
TOTAL FLOOR DEAD LOAD	135 PSF
PLUS WEIGHT OF EQUIPMENT WHERE INDICATED	

EARTHQUAKE LOAD DATA

SEISMIC DESIGN CATEGORY	D
SEISMIC IMPORTANCE FACTOR	Ie = 1.25
SEISMIC FORCE RESISTING SYSTEM	INTERMEDIATE REINF. CONCRETE MOMENT FRAMES
SEISMIC RESPONSE FACTOR	R=5
METHOD OF ANALYSIS	EQUIVALENT LATERAL FORCE PROCEDURE
SEISMIC COEFFICIENT	Cs = 0.076

THIS RECORD DOCUMENT HAS BEEN PREPARED BASED ON INFORMATION PROVIDED BY THE CONSTRUCTION CONTRACTOR. GRW ENGINEERS, INC. HAS ATTEMPTED TO VERIFY THE ACCURACY AND/OR COMPLETENESS OF THIS INFORMATION BUT SHALL NOT BE RESPONSIBLE FOR ANY ERRORS OR OMISSIONS WHICH MAY BE INCORPORATED HEREIN AS A RESULT.

engineering | architecture | geospatial
www.grwinc.com

ENGINEER/ARCHITECT: MICHAEL J. WHITE

CONSTRUCTION COMPANY: QUINN CONS CORP.

09/27/2018

This document, originally issued, sealed, and signed by MICHAEL J. WHITE, Tennessee Professional Engineer, No. 117300, on JUNE 2015, shall not be used in lieu of a certified document.

RECORD DRAWINGS

GRW PROJECT NO. 3827-07

CLIENT PROJECT NO.

ALL RIGHTS RESERVED
THIS DOCUMENT IS THE PROPERTY OF GRW ENGINEERS, INC. AND MAY NOT BE REPRODUCED IN WHOLE OR IN PART OR CONVEYED TO ANY PERSON OR FIRM OTHER THAN THE SPECIFIC PROJECT WITHOUT WRITTEN PERMISSION

engineering | architecture | geospatial
www.grwinc.com

FILTER BUILDING ADDITION FOUNDATION PLANS

WATER TREATMENT PLANT EXPANSION
CITY OF LOBELVILLE, TENNESSEE

DESIGNED: MJW
DRAWN: LN
REVIEWED: MJW
APPROVED: MJW

REVISIONS

NO.	DESCRIPTION	DATE	BY
1	FIELD ORDER	10/12/18	MWC

THIS MARK SHOULD MEASURE EXACTLY 1" WHEN PLOTTED
SCALE CHECK

DATE: JUNE 2015

SCALE: AS SHOWN

SHEET NO. S-6-101

PLOTTED BY: razad

PRINTED: 10/12/2018 @ 10:18AM

FILE NAME: G:\3827-Lobelville\07-WTP Expan\Working Drawings\AutoCAD - Record Drawing\3827-07_S-6-101.dwg