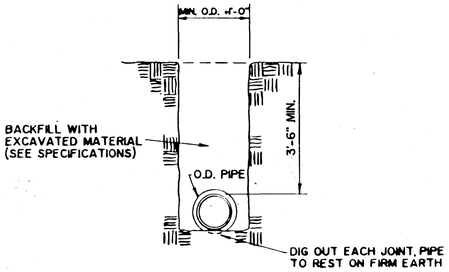

TYPICAL TRENCH DETAIL

NO SCALE

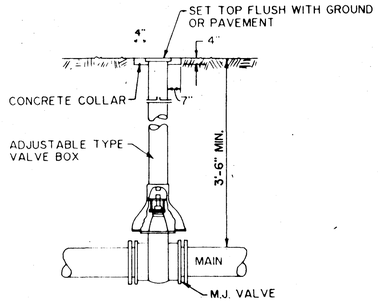

TYPICAL GATE VALVE & VALVE BOX

NO SCALE

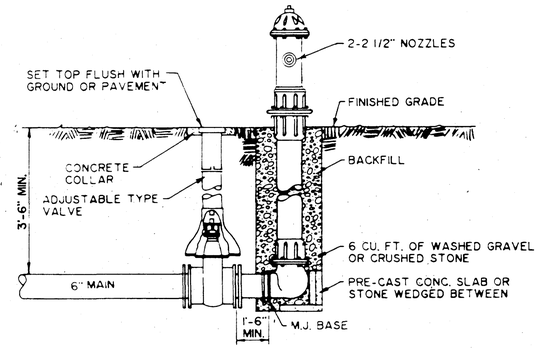

STANDARD FLUSH HYDRANT

NO SCALE

THRUST BLOCK SCHEDULE

PIPE SIZE	BENDS 90°	BENDS 45°	BENDS 22½°	BENDS 11¼°	TEE	VALVES & HYDRANT	REDUCER
16"	37.8	19.1	11.2	3.0	29.6	21.4	16 x 14 3.4
14"	29.8	14.9	8.9	2.3	23.2	16.4	14 x 12 3.1
12"	21.1	8.6	6.4	1.7	16.6	10.5	12 x 10 2.6
10"	11.5	5.9	3.4	1.2	9.4	7.8	10 x 8 2.1
8"	7.2	3.7	2.1	1.2	5.4	4.6	8 x 6 1.6
6"	3.2	3.0	1.3	1.2	3.5	2.6	6 x 4 1.6
4" & Under	1.3	3.0	1.3	1.2	3.5	1.3	4 x 3 1.6

NOTE: Class 150 Pipe, Test Pressure 2/sq.'. Soil Bearing 2000 #/ft.²
Thrust Block contact area of undisturbed earth base in ft.²
Concrete thrust blocks to be 2500 P.S.I. Concrete, poured in place, with slump between 1" minimum and 4" maximum.

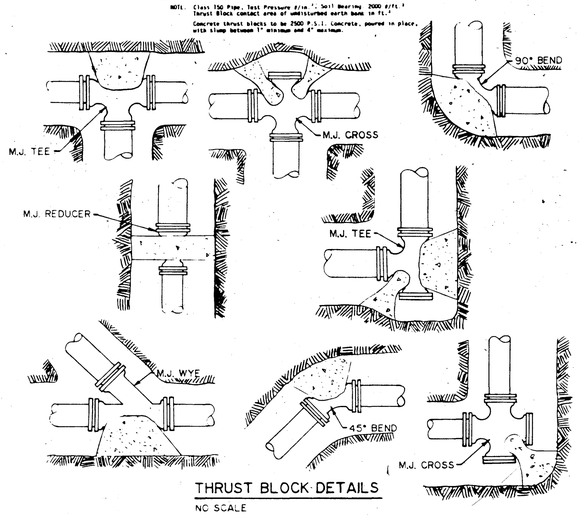

THRUST BLOCK DETAILS

NO SCALE

CHLORINE REQUIRED FOR MAIN DISINFECTION PER AWWA - # 50 PPM

MAIN SIZE	REQUIRED CHLORINE: SOLUTION - SODIUM HYPOCHLORITE - 15%	POWDER - CALCIUM HYPOCHLORITE - 68% (HTH)
2"	.07 gal.	.13 lb.
4"	.25 gal.	.48 lb.
6"	.56 gal.	1.07 lb.
8"	1.0 gal.	1.90 lb.
10"	1.51 gal.	2.90 lb.
12"	2.16 gal.	4.14 lb.

NOTE: Water main to be disinfected for a minimum of 24 hours at 50 ppm. A 10 ppm residual is required at the end of the 24 hour sterilization period.
All sterilization shall conform to AWWA 651-86.

WATER LINE PRESSURE DATA SUMMARY

LOCATION NO.	DESCRIPTION OF LOCATION	GROUND ELEVATION	MAX STATIC PRESSURE	PIPE CLASS
1	END OF EXISTING 3" WATER MAIN AND BEGINNING OF NEW 3" PVC WATER MAIN AT WEST COUNTY ROAD	900'	100 p.s.i	SDR 26
2	WEST COUNTY ROAD & SANGAMAW ROAD	890'	105 p.s.i	SDR 26
3	WEST COUNTY ROAD END 3" FLUSH HYDRANT	865'	116 p.s.i.	SDR 21
4	SANGAMAW ROAD & DAVIES ROAD	870'	113 p.s.i.	SDR 21
5	3" FLUSH HYDRANT AT END OF SANGAMAW ROAD	830'	131 p.s.i.	SDR 21
6	3" FLUSH HYDRANT AT END OF DAVIES ROADF	850'	122 p.s.i.	SDR 21

MATERIAL LIST

ITEM NO.	ITEM DESCRIPTION	UNITS	QUANTITY
1a.	3" SDR 21 P.V.C. WATER MAIN	L.F.	13,650
2a.	3" D.I.M.J. 90 BEND	EACH	3
3a.	3" x 3" D.I.M.J. TEE	EACH	3
4.	3" GATE VALVE & BOX	EACH	5
5.	3" STD. FLUSH HYDRANT	EACH	3
6.	3" DOUBLE BELL COUPLING	EACH	1

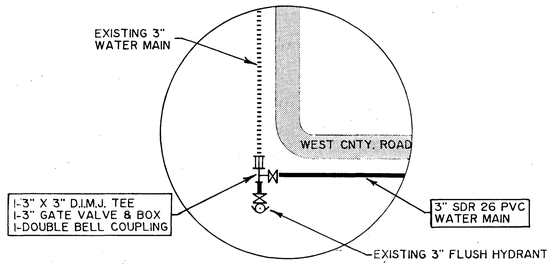

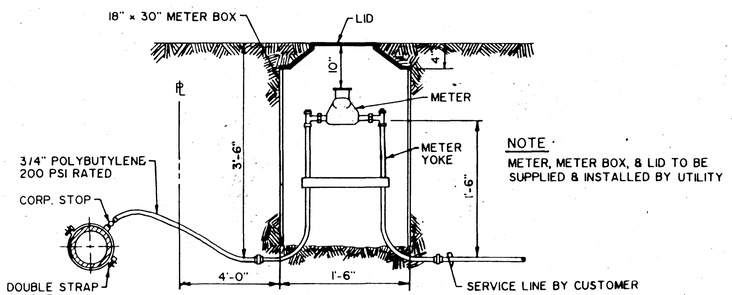

NOTE:
METER, METER BOX, & LID TO BE SUPPLIED & INSTALLED BY UTILITY

METER & BOX SETTING

NO SCALE

1	CONNECTION DETAIL
2	NO SCALE

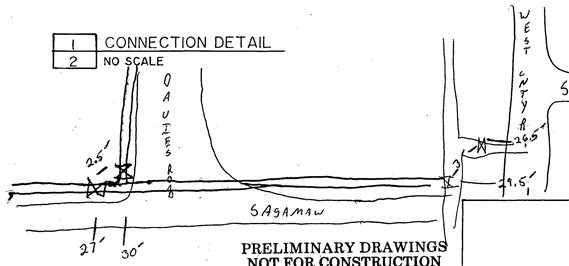

PRELIMINARY DRAWINGS NOT FOR CONSTRUCTION

DATE 11/22/89

Robert E. Curry & Associates, Inc.
Engineers and Architects
3346 Avon Road, Plainfield, IN 46168
(317)-272-3050

ELROD WATER COMPANY, INC.

DISTRIBUTION SYSTEM ADDITION

DRAWN BY D. ELM

REVISED

STANDARD DETAILS, PRESSURE SUMMARY, & MATERIAL LIST

DATE | APPROVED BY | DRAWING NUMBER 2 OF