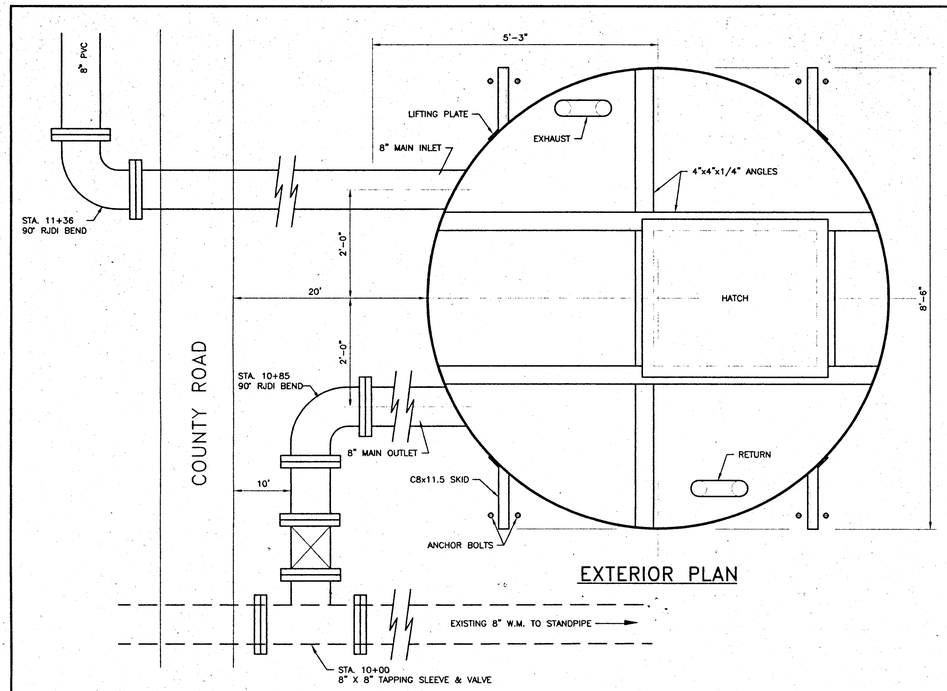

EXTERIOR PLAN

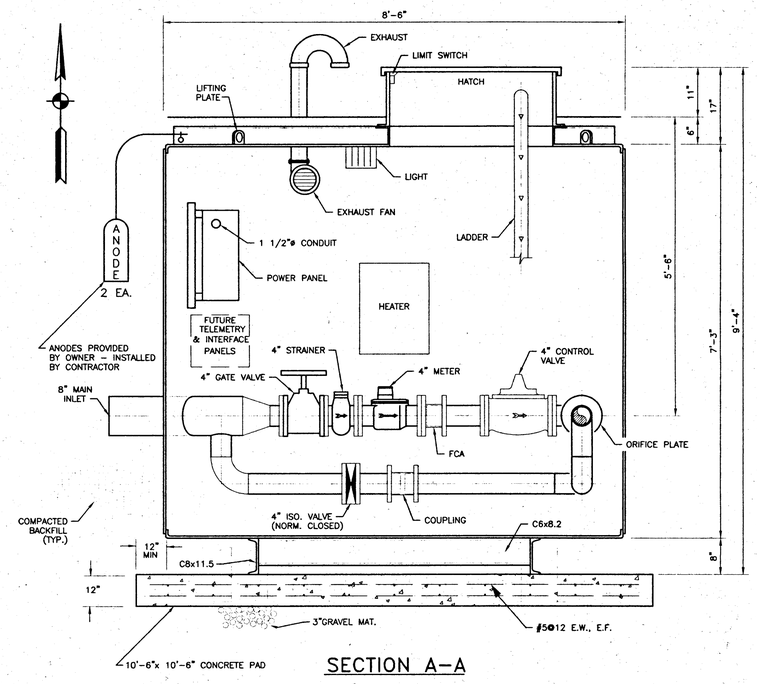

SECTION A-A

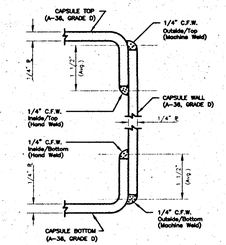

LAP JOINT CONNECTION OF CAPSULE WALL PLATE WITH FLANGE TOP AND BOTTOM

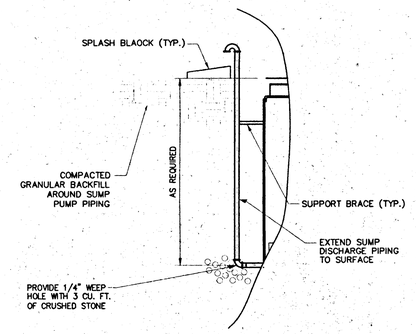

SUMP DISCHARGE DETAIL

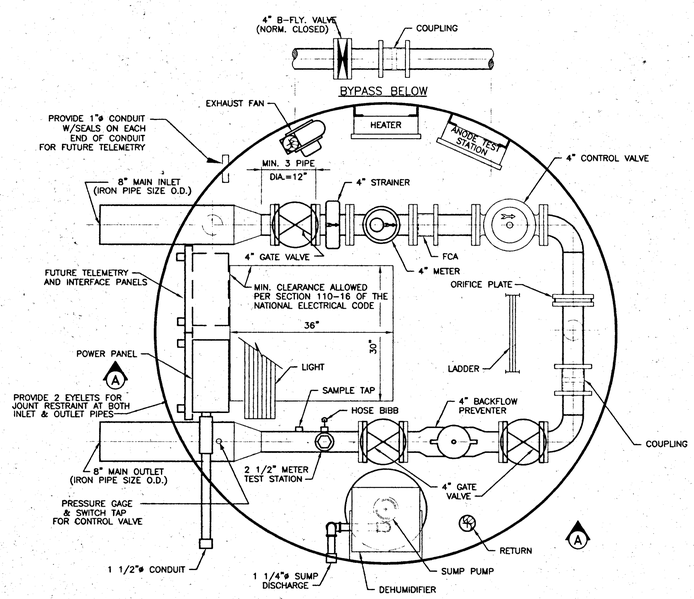

INTERIOR PLAN

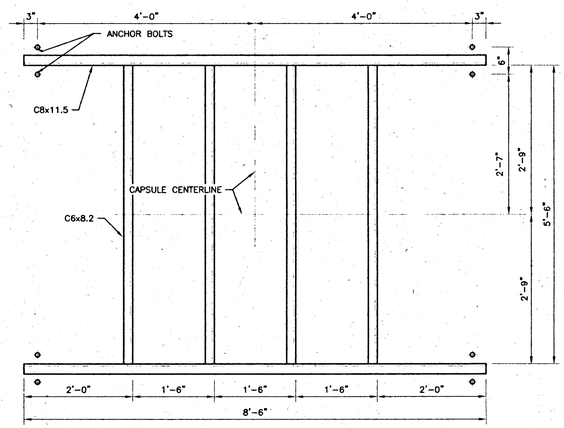

SKID PLAN

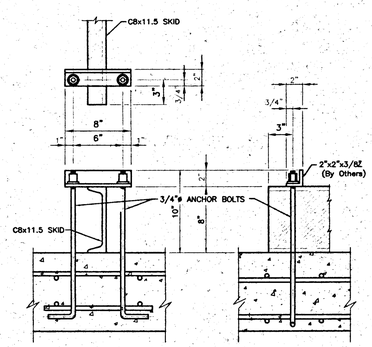

TYPICAL ANCHOR DETAIL

NOTE: 1. ANCHOR CLIPS FURNISHED BY OWNER
2. ANCHOR BOLTS & NUTS FURNISHED, BY CONTRACTOR

NOT CONSTRUCTED

NOTES:

1). METER STATION MANUFACTURER (OWNER) SHALL PROVIDE ALL PIPING TO ABOVE FINISHED GRADE LOCATIONS, INCLUDING ELBOW AND RETURNS OUTSIDE OF STATION, FOR SUMP PUMP PIPING, AND AIR/EXHAUST PIPING.

2). FCA - FLANGED COUPLING ADAPTER

3). B-FLY - BUTTERFLY VALVE

4). METER VAULT DETAILS ARE SHOWN FOR INFORMATIONAL PURPOSES ONLY - CONTRACTOR IS REQUIRED TO CONSTRUCT FOUNDATION, INSTALL VAULT, INSTALL/ CONNECT UTILITIES/ ELECTRIC AND PROVIDE EXCAVATION/ BACKFILL EFFORTS.

HOOSIER HILLS REGIONAL WATER DISTRICT

MILAN METER VAULT

GRW PROJECT NO. 2543-04

CONTRACT NO.

NO.	DESCRIPTION	DATE	BY
	REVISIONS		

GREGORY A. WRIGHT REGISTERED No. 19300607 STATE OF INDIANA PROFESSIONAL ENGINEER

GRW Engineers, Inc.
Engineers, Architects, Planners
INDIANAPOLIS, INDIANA
LOUISVILLE & LEXINGTON, KENTUCKY
CINCINNATI, OHIO
NASHVILLE, TENNESSEE

DRAWN: BJD	DATE: 3/17/98
FILE NAME: DETAIL.DWG	SCALE: NONE
CHECKED:	SHEET NO. 2
APPROVED: GW	

T:\2543\DWG\Sht2.dwg Tue Sep 28 21:14:29 1999