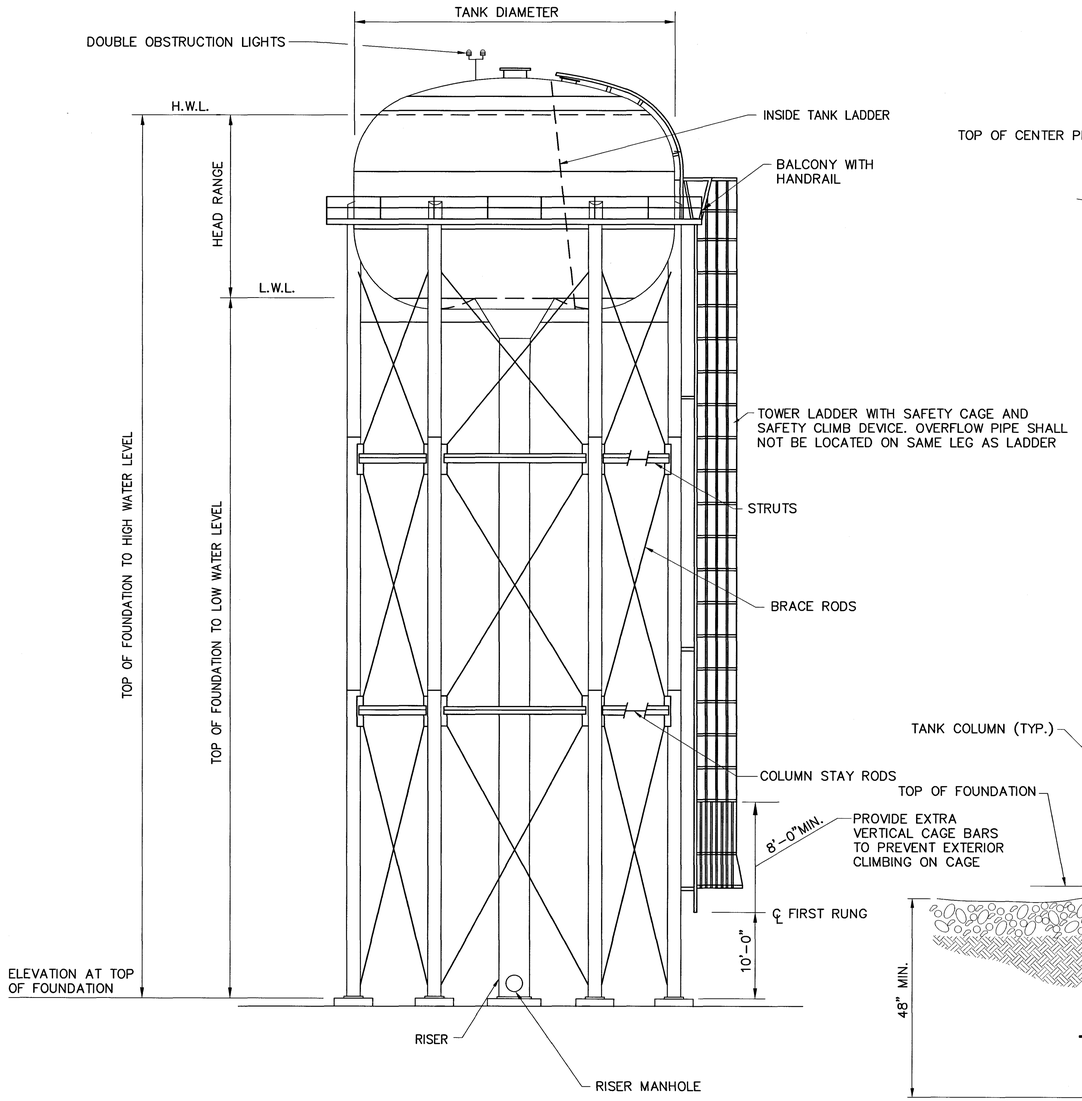

ELEVATED WATER STORAGE TANK
SCALE: N.T.S.

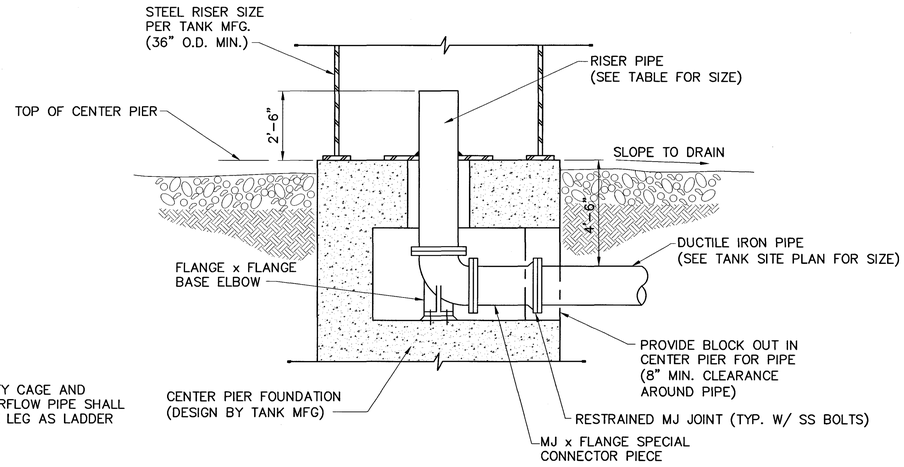

CENTER PIER AND INFLUENT PIPING DETAIL
SCALE: N.T.S.

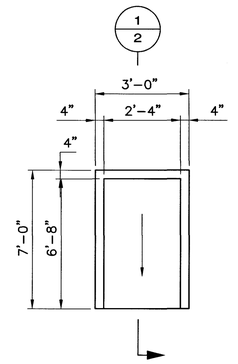

CONC. SPLASH BLOCK - PLAN
SCALE: N.T.S.

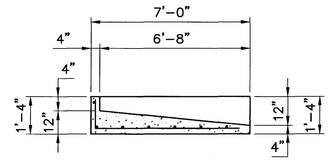

SECTION 1/2
SCALE: N.T.S.

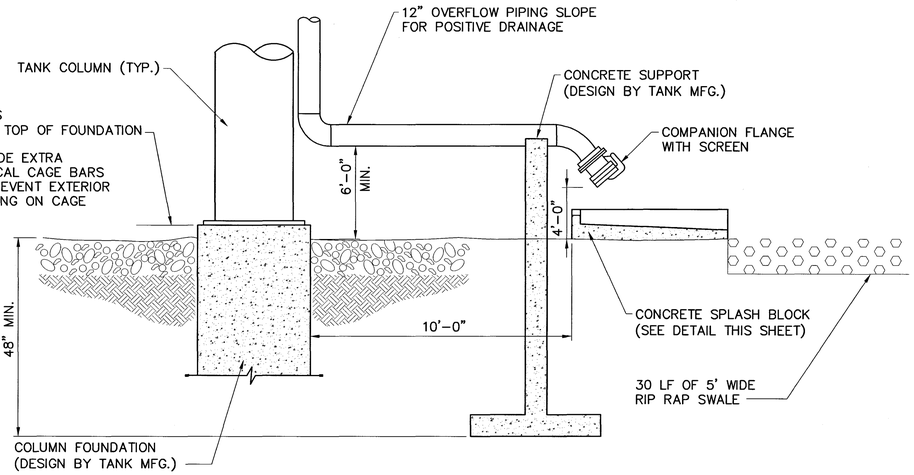

COLUMN FOUNDATION AND OVERFLOW DETAIL
SCALE: N.T.S.

TANK INFORMATION	
GALLONS	300,000
TANK DIAMETER	43'-0"
HIGH WATER LEVEL H.W.L.	1180.00
ELEV. @ TOP OF FDN.	981.00
HEAD RANGE	30'-0"
TOP OF FDN. TO H.W.L.	199'-0"
TOP OF FDN. TO L.W.L.	169'-0"
RISER PIPE SIZE	12"

RECORD DRAWING

This drawing has been revised from the original contract drawings to show minor/ major changes made during construction. This drawing is not warranted to be complete and accurate in all respects.

GRW Engineers, Inc.

Date: 5/2004 By: MB

NOTES:

NO.	DESCRIPTION	DATE	BY
1	AS-BUILT REVISIONS	5/2004	MSB

REVISIONS

HOOSIER HILLS REGIONAL WATER DISTRICT

DIVISION "F" WATERWORKS SYSTEM IMPROVEMENTS
CONTRACT F-3
SOUTH MILAN TANK DETAILS

GRW PROJECT NO. 2745-04

GREGORY A. WRIGHT REGISTERED No. 19300607 STATE OF INDIANA PROFESSIONAL ENGINEER

GRW Engineers, Inc.
Engineers, Architects, Planners
INDIANAPOLIS, INDIANA
LOUISVILLE & LEXINGTON, KENTUCKY
CINCINNATI, OHIO
NASHVILLE, TENNESSEE
ARLINGTON, TEXAS

DRAWN: BJD	DATE: JULY 2002
FILE NAME: SHT.597	SCALE: N.T.S.
CHECKED:	SHEET NO. 597
APPROVED:	

I:\2745\dwg\F-3\Sht.597.dwg, 11/15/2004 1:27:32 PM