NOTES:

1. DEPTH "D" MAY BE GREATER THAN SPECIFIED TO ALLOW WORKING SPACE. BLOCKING MUST BE PLACED AGAINST UNDISTURBED EARTH.

PLUGS								
SIZE	4"	6"	8"	12"	16"	18"	20"	24"
D	16"	18"	18"	24"	24"	30"	30"	30"
L	16"	18"	22"	30"	48"	48"	48"	48"
T	10"	12"	12"	12"	12"	18"	24"	24"
W	16"	18"	22"	24"	30"	30"	48"	48"
11 1/4°, 22 1/2° & 45° BENDS								
SIZE	4"	6"	8"	12"	16"	18"	20"	24"
D	6"	6"	6"	6"	8"	16"	16"	16"
L	12"	14"	16"	20"	34"	40"	45"	52"
T	12"	14"	14"	16"	28"	33"	37"	46"
W	10"	12"	14"	18"	22"	25"	28"	32"
90° BENDS								
SIZE	4"	6"	8"	12"	16"	18"	20"	24"
D	8"	8"	10"	12"	12"	16"	20"	20"
L	20"	24"	27"	34"	48"	51"	54"	70"
T	10"	16"	18"	22"	36"	40"	44"	50"
W	12"	12"	16"	24"	28"	34"	40"	44"
TEES								
SIZE	4"	6"	8"	12"	16"	18"	20"	24"
D	8"	8"	12"	12"	12"	16"	38"	38"
L	10"	18"	24"	27"	28"	30"	48"	48"
W	16"	12"	18"	24"	28"	34"	48"	48"
T	12"	12"	15"	18"	20"	22"	24"	24"
VERTICAL BEND & STRAIGHT PIPE								
SIZE	4"	6"	8"	12"	16"	18"	20"	24"
D	12"	15"	15"	18"	21"	21"	24"	24"
L	18"	24"	24"	30"	36"	36"	36"	42"

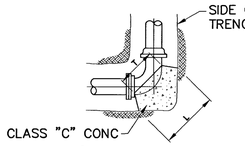

111/4° THRU 90° BENDS

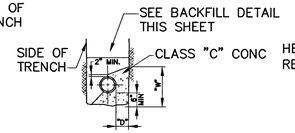

TYPICAL BLOCKING SECTION

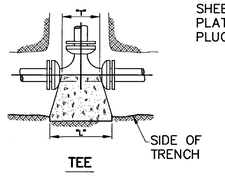

TEE

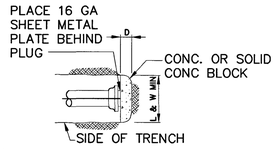

PLUGS

CONCRETE THRUST BLOCKS
NTS

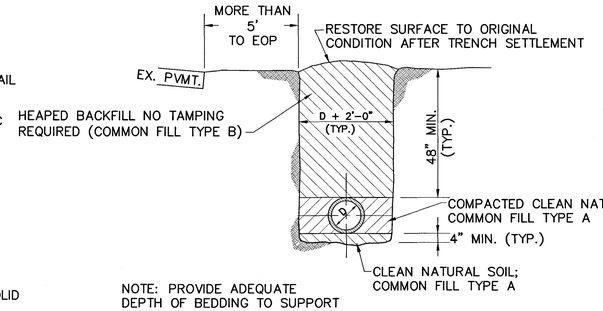

NOTE: PROVIDE ADEQUATE DEPTH OF BEDDING TO SUPPORT BOTTOM QUADRANT OF PIPE.

METHOD A
OPEN TERRAIN

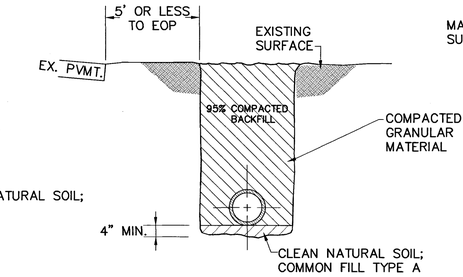

METHOD B
OPEN TERRAIN

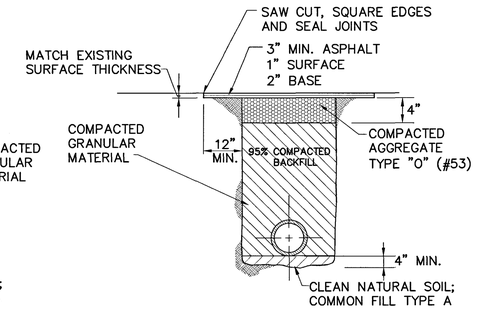

METHOD C
ASPHALT DRIVEWAYS

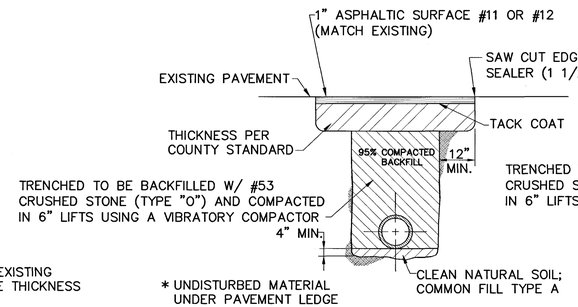

METHOD F
ASPHALT ROADS

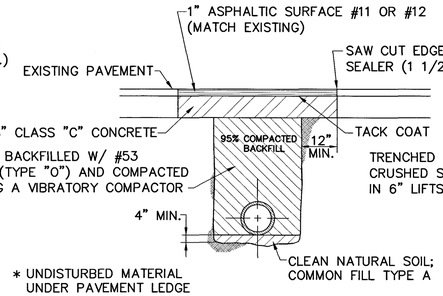

METHOD G
CONCRETE ROAD UNDER ASPHALT SURFACE

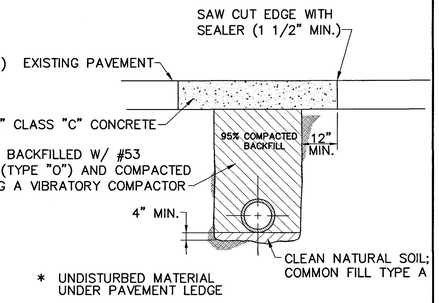

METHOD H
CONCRETE ROAD

BEDDING / BACKFILL / PAVEMENT REPLACEMENT DETAILS
NTS

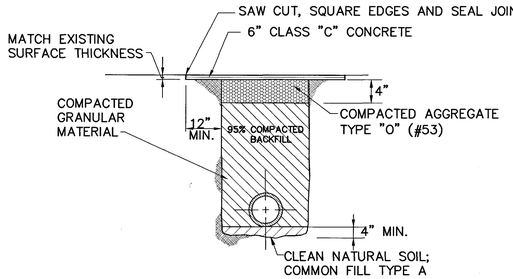

METHOD D
CONCRETE DRIVEWAYS

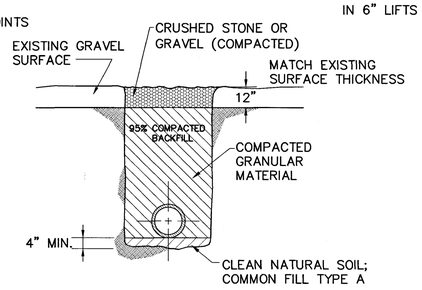

METHOD E
UNPAVED DRIVEWAYS

BEDDING / BACKFILL / PAVEMENT REPLACEMENT DETAILS
NTS

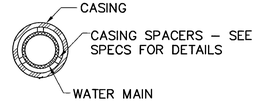

CENTERING CASING SPACER

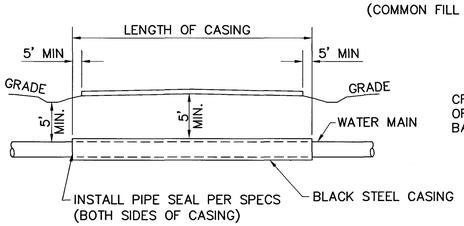

TYPICAL CASING DETAIL
NTS

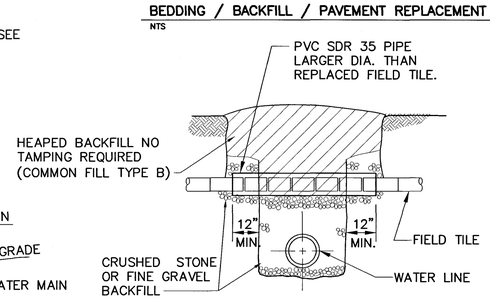

FIELD DRAIN REPLACEMENT DETAIL
NTS

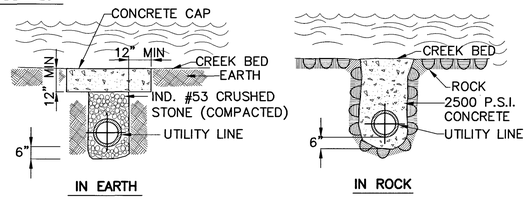

TYPICAL STREAM CROSSING DETAIL
NTS

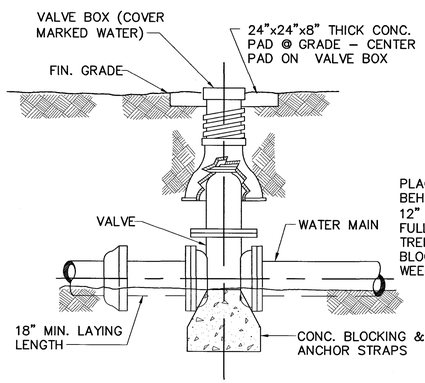

TYPICAL WATER VALVE SETTING
NTS

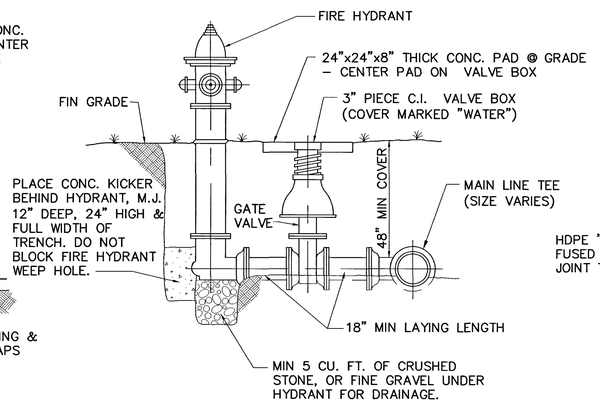

FIRE HYDRANT ASSEMBLY
NTS

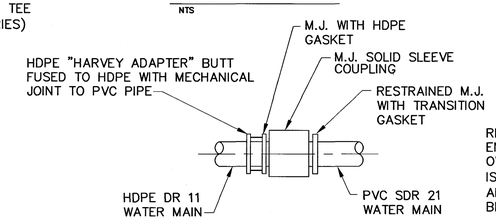

HDPE/PVC TRANSITION COUPLING
NTS

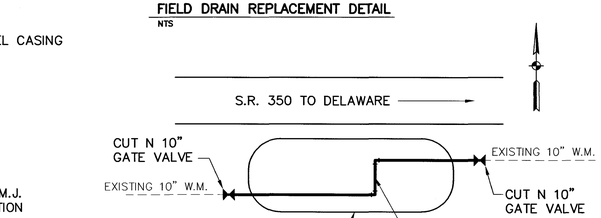

REMOVE DELAWARE PUMP STATION IN ITS ENTIRETY AND PROPERLY DISPOSE OF IN AN OWNER APPROVED MANNER. STATION SIZE IS 8'-0" WIDE X 16'-0" LONG X 9'-4" HIGH AND IS BURIED APPROXIMATELY 6" TO 12" BELOW TO THE TOP OF THE STATION.

AFTER STATION IS REMOVED INSTALL APPROXIMATELY 22± LF OF 10" SDR-21 PVC WATER MAIN WITH (2) 10" RJDI 90° BENDS; BACKFILL WITH 95% COMPACTED GRANULAR MATERIAL

DELAWARE PUMP STATION ABANDONMENT
NTS

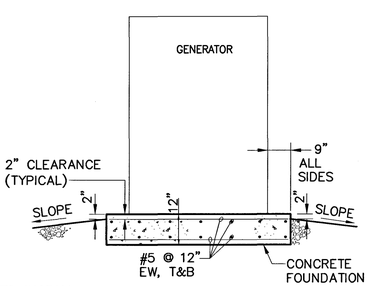

GENERATOR FND DET
NTS

NOTES:

RECORD DRAWING

This drawing has been revised from the original contract drawings to show minor/ major changes made during construction. This drawing is not warranted to be complete and accurate in all respects.

GRW Engineers, Inc.

Date: 5/2004 By: MSB

NO.	DESCRIPTION	DATE	BY
1	AS-BUILT REVISIONS	5/2004	MSB

REVISIONS

HOOSIER HILLS REGIONAL WATER DISTRICT
DIVISION "F" WATERWORKS SYSTEM IMPROVEMENTS
CONTRACT F-1
DETAILS

GRW PROJECT NO. 2745-04

GREGORY A. WRIGHT REGISTERED No. 19300607 STATE OF INDIANA PROFESSIONAL ENGINEER

GRW Engineers, Inc.
Engineers, Architects, Planners
INDIANAPOLIS, INDIANA
LOUISVILLE & LEXINGTON, KENTUCKY
CINCINNATI, OHIO
NASHVILLE, TENNESSEE
ARLINGTON, TEXAS

DRAWN: BJD	DATE: JULY 2002
FILE NAME: SHEET561.DWG	SCALE: AS NOTED
CHECKED:	SHEET NO. 561
APPROVED:	

I:\2745\dwg\F-1\Record Dwgs\Sheet561.dwg, 11/8/2004 1:16:00 PM