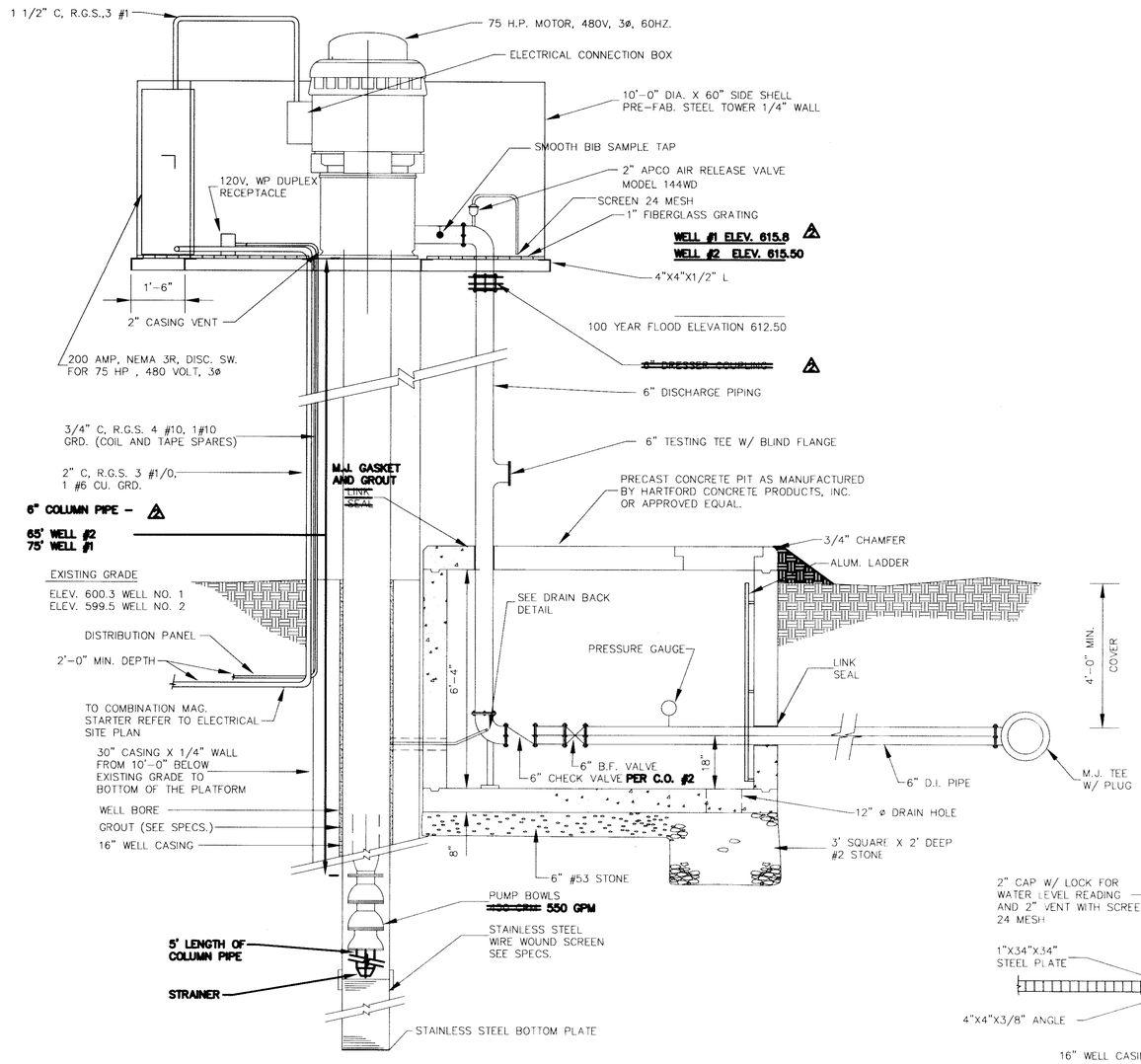

SECTION – NEW WELLS

SCALE: 1/2" = 1'-0"

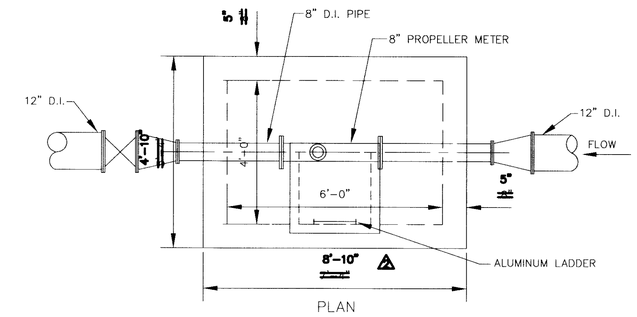

PLAN

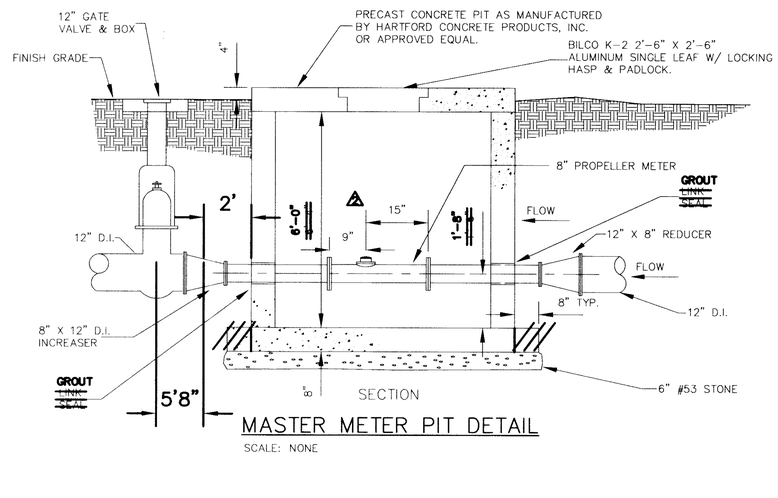

MASTER METER PIT DETAIL

SCALE: NONE

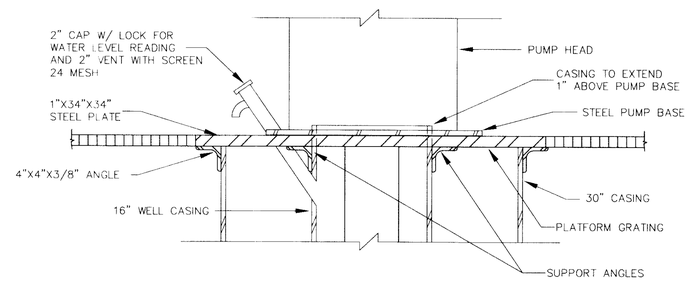

PUMP HEAD DETAIL

SCALE: NONE

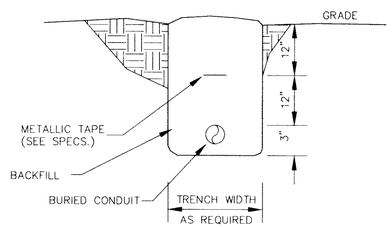

BURIED CONDUIT TRENCH

SCALE: NONE

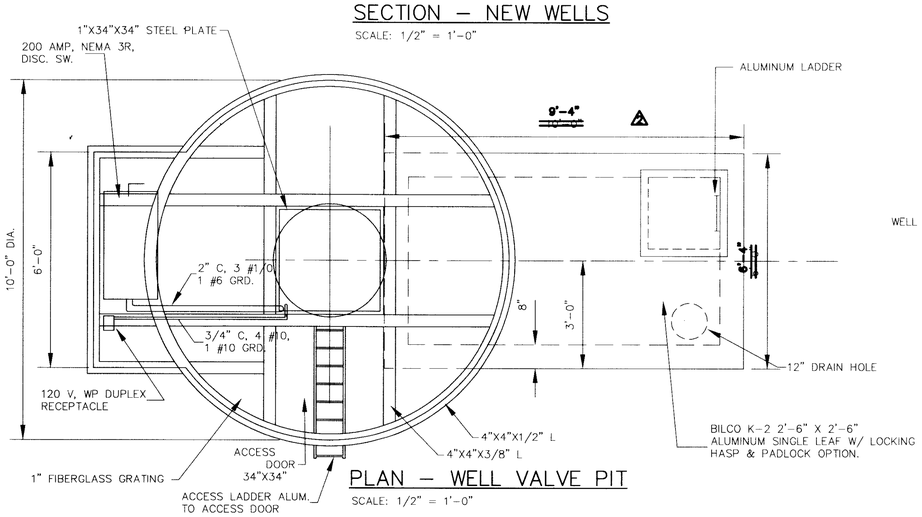

PLAN – WELL VALVE PIT

SCALE: 1/2" = 1'-0"

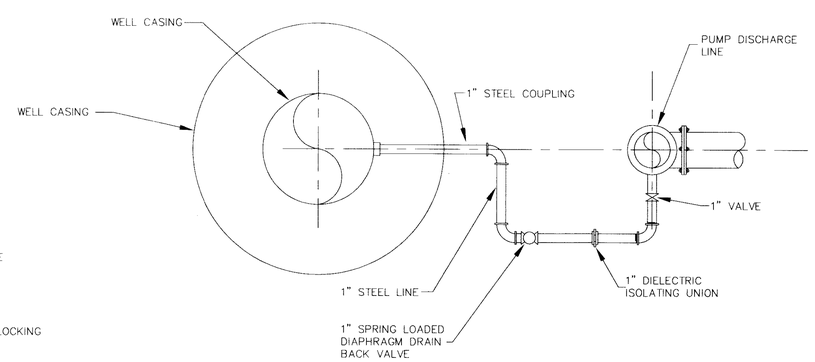

DRAIN BACK DETAIL

SCALE: NONE

RECORD DRAWINGS

THESE DRAWINGS HAVE BEEN PREPARED FROM INFORMATION BY OTHERS. ENGINEER WILL NOT BE RESPONSIBLE FOR ERRORS AND OMMISSIONS IN THE INFORMATION OR RECORDS FROM WHICH THESE DRAWINGS ARE PRODUCED.

NO.	DATE	BY	REVISIONS
2	11/8/96	CLG	RECORD DRAWINGS
1	3/4/94	CLG	VARIOUS PIPING CHANGES

CONTRACT "B"
WELLS AND TREATMENT FACILITIES
WELL TOWER AND PIT DETAILS
ELROD WATER COMPANY, INC.
DIVISION "E"
WATERWORKS SYSTEM IMPROVEMENTS

M.A.D. WESSLER and ASSOCIATES
CONSULTING ENGINEERS
6219 South East Street, Suite A
Indianapolis, Indiana 46227-2148

SCALE:	AS SHOWN
DATE:	OCT. 14, 1993
PROJECT NO.:	37391.04
DRAWN BY:	C.L.G.
APPROVED BY:	D.G.C.
PLOTTED:	3/1/94
CAD FILE:	373-B4.DWG

NOT PUBLISHED
ALL RIGHTS RESERVED

EXCEPT FOR USES EXPRESSLY PERMITTED IN WRITING, INFORMATION SHOWN OR INCLUDED IN THIS DOCUMENT IS SOLELY THE PROPERTY OF M.D. WESSLER & ASSOCIATES, INC.

MARTIN A. WESSLER REGISTERED No. 90188 STATE OF INDIANA PROFESSIONAL ENGINEER

SHEET B4
OF 19

C:\DWG\373-B4 Thu Nov 21 09:08:26 1996