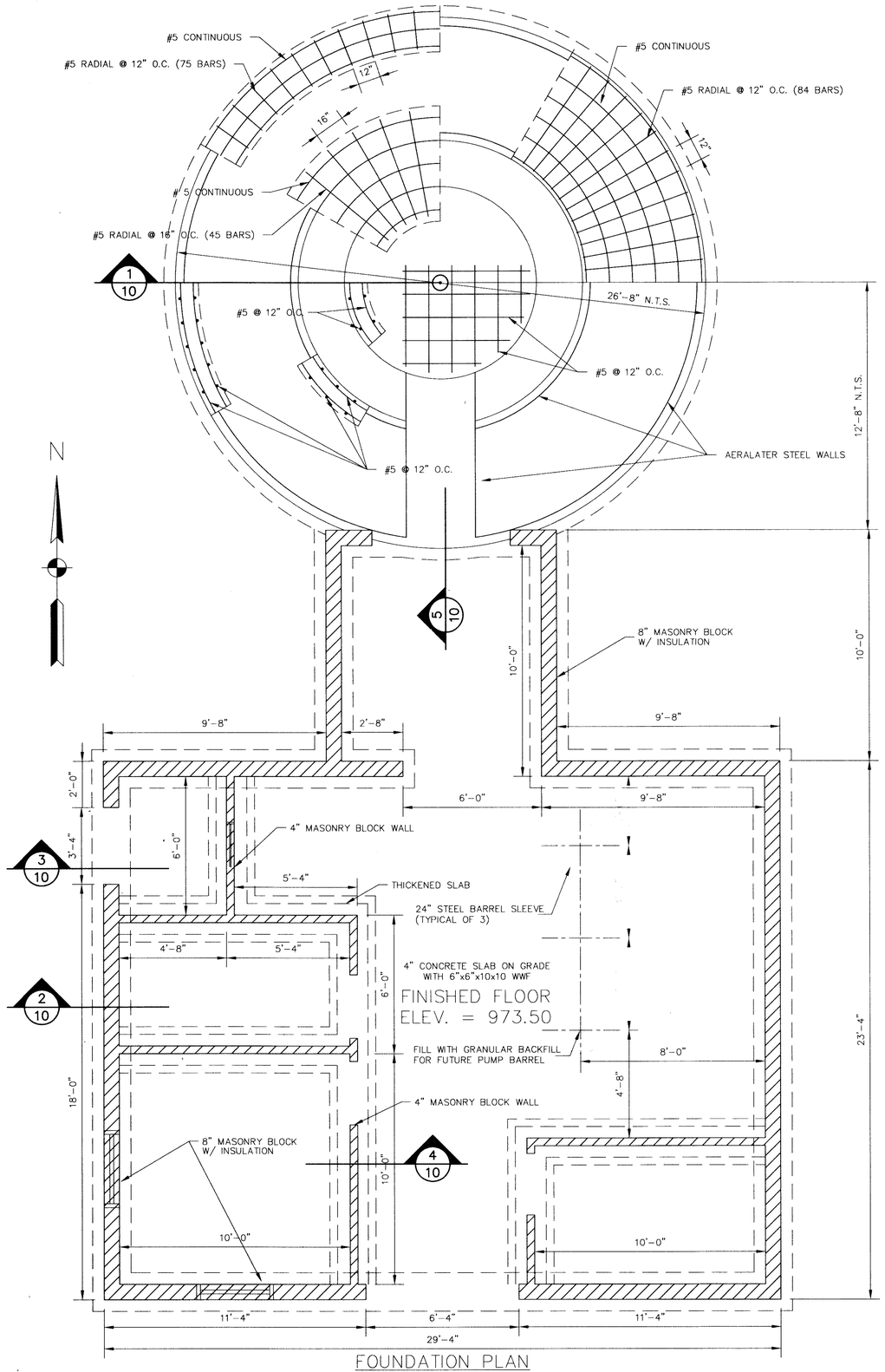

FOUNDATION PLAN
SCALE: 3/8" = 1'-0"

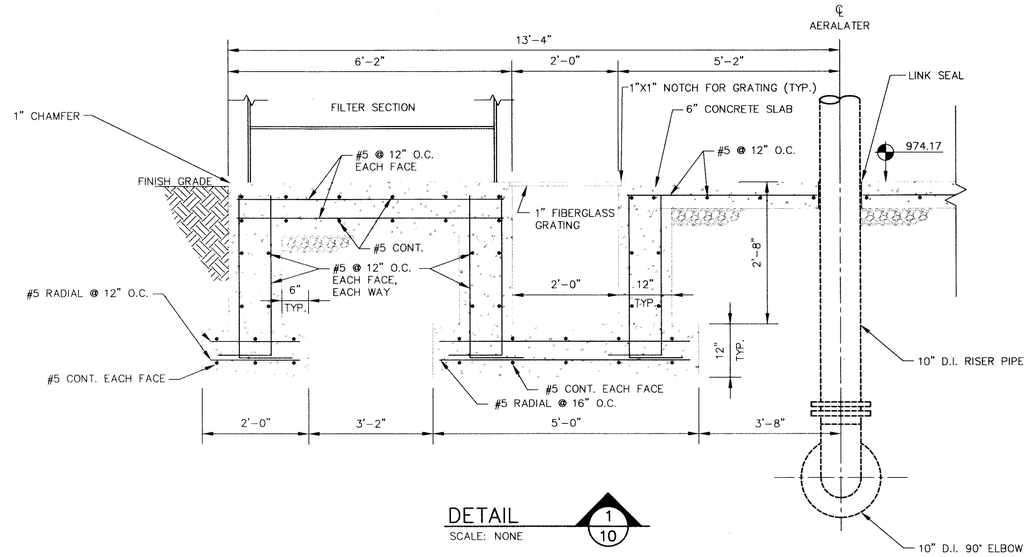

DETAIL 1/10
SCALE: NONE

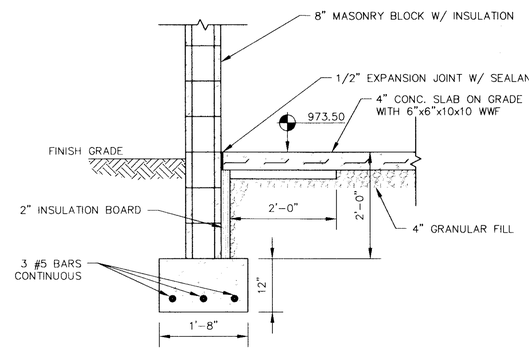

DETAIL 2/10
SCALE: 3/4" = 1'-0"

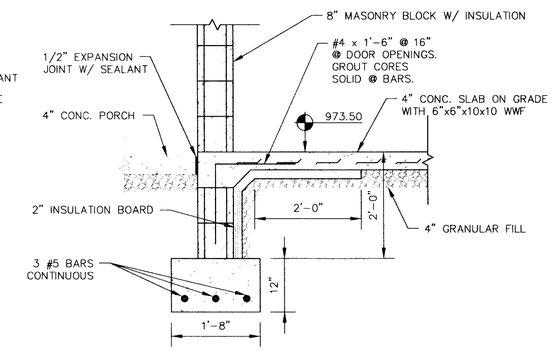

DETAIL 3/10
SCALE: 3/4" = 1'-0"

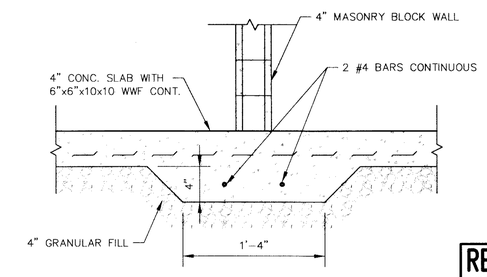

DETAIL 4/10
SCALE: 3/4" = 1'-0"

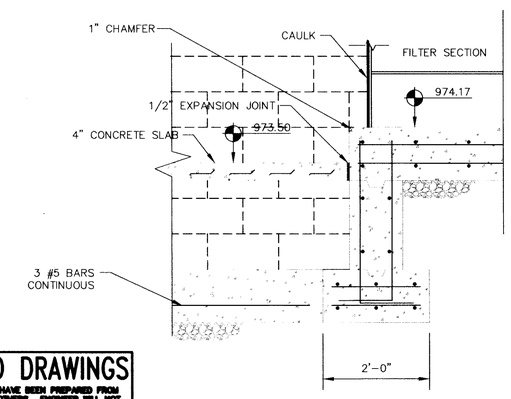

DETAIL 5/10
SCALE: 3/4" = 1'-0"

RECORD DRAWINGS

THESE DRAWINGS HAVE BEEN PREPARED FROM INFORMATION BY OTHERS. ENGINEER WILL NOT BE RESPONSIBLE FOR ERRORS AND OMMISSIONS IN THE INFORMATION OR RECORDS FROM WHICH THESE DRAWINGS ARE PRODUCED.

NO.	DATE	BY	REVISIONS
2.	11/8/96	CLG	RECORD DRAWINGS
1.	3/4/94	CLG	REVISED BLDG. & AERALATER SIZES

CONTRACT "B"
WELLS AND TREATMENT FACILITIES
FOUNDATION PLAN AND DETAILS
ELROD WATER COMPANY, INC.
DIVISION "E"
WATERWORKS SYSTEM IMPROVEMENTS

M.D. WESSLER and ASSOCIATES
CONSULTING ENGINEERS
6219 South East Street, Suite A
Indianapolis, Indiana 46227-2148

SCALE:	AS SHOWN
DATE:	OCT. 14, 1993
PROJECT NO.:	37391.04
DRAWN BY:	M.A.W.
APPROVED BY:	D.G.C.
PLOTTED:	4/12/94
CAD FILE:	373-B10.DWG

NOT PUBLISHED
ALL RIGHTS RESERVED
EXCEPT FOR USES EXPRESSLY PERMITTED IN WRITING, INFORMATION SHOWN OR INCLUDED IN THIS DOCUMENT IS SOLELY THE PROPERTY OF M.D. WESSLER & ASSOCIATES, INC.

MARTIN A. WESSLER REGISTERED No. 800128 STATE OF INDIANA PROFESSIONAL ENGINEER

SHEET B10
OF 19

A:\373-B10 Wed Jul 10 09:48:47 1996