CONTRACTOR SHALL ADHERE AND REFERENCE THE CURRENT FALL CREEK REGIONAL WASTE DISTRICT STANDARDS FOR DESIGN AND CONSTRUCTION OF SANITARY SEWERS.

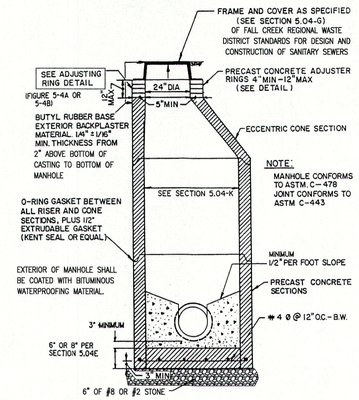


STANDARD MANHOLE FOR PIPE SIZES 8" thru 24" (Straight Thru)

FIGURE 5-1

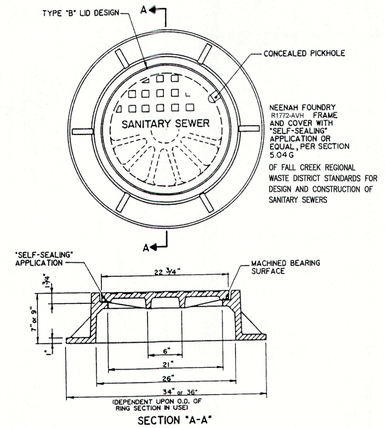


SANITARY SEWER MANHOLE
FRAME & COVER - STANDARD MANHOLE

FIGURE 5-7

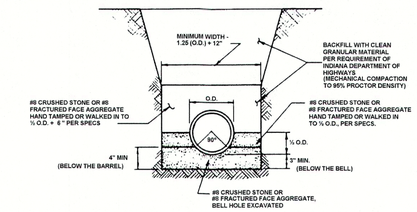


| PIPE SIZE | 8" TO 15" | 18" & OVER |
|---|---|---|
| BEDDING BELOW THE PIPE BARREL | O.D. / 4 MIN. = 4" | O.D. / 4 MAX. = 8" |

SEMI-RIGID PIPE BEDDING DETAIL
(PVC Composite Pipe & Ductile Iron Pipe)

FIGURE 7-2

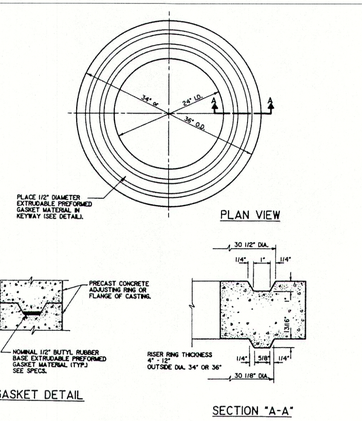


ADJUSTING RING

FIGURE 5-4A

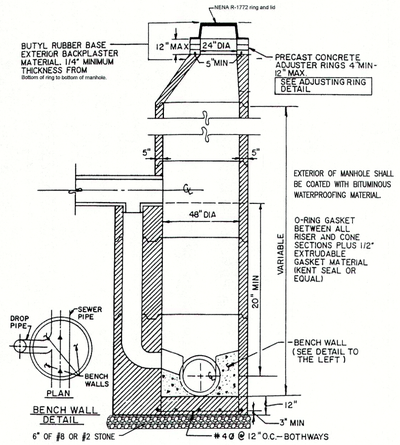


PRECAST DROP MANHOLE

FIGURE 5-8

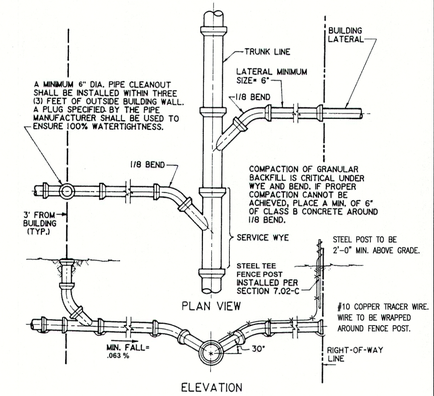


SERVICE CONNECTION FOR SHALLOW SEWERS
(LESS THAN 15' DEEP)

FIGURE 7-4

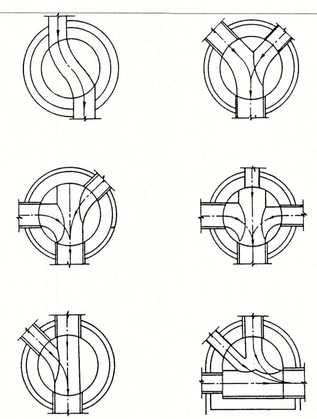

SANITARY SEWER
BENCH SLOPE= 1/2" PER FOOT

STANDARD MANHOLE BENCHES

FIGURE 5-6

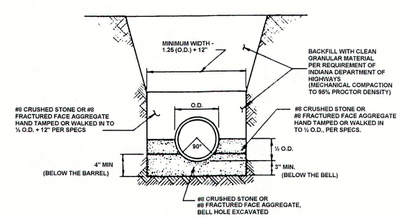


| PIPE SIZE | 8" TO 15" | 18" & OVER |
|---|---|---|
| BEDDING BELOW THE PIPE BARREL | O.D. / 4 MIN. = 4" | O.D. / 4 MAX. = 8" |

FLEXIBLE PIPE BEDDING DETAIL
PVC & HDPE Pipe

FIGURE 7-1

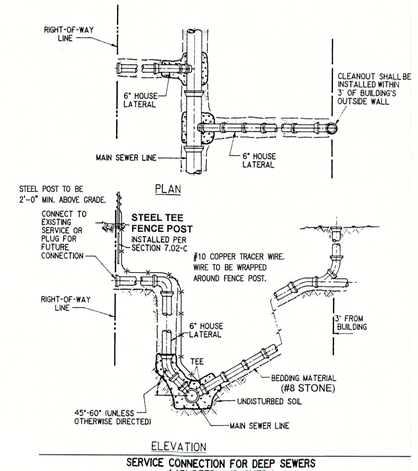


SERVICE CONNECTION FOR DEEP SEWERS
( 15' DEEP AND OVER )

FIGURE 7-5

Plot Date: Aug 26, 2019 Plot Time: 10:18am File Name: W:\calatlantic homes\2017-271-b calatlantic- springbrook sect 2\Design\CAD\17271-B.Construction Details.dwg, Layout: C8.6 By: keichhorn

REVISIONS

| DATE | DESCRIPTION | BY |
|---|---|---|
| | | |
| | | |
| | | |
| | | |
| | | |
| | | |
| | | |

HWC ENGINEERING
INDIANAPOLIS - TERRE HAUTE
LAFAYETTE - MUNICE - NEW ALBANY
www.hwcengineering.com

SPRINGBROOK SECTION 2
CONSTRUCTION DETAILS

PRELIMINARY
NOT FOR CONSTRUCTION
KRISTOPHER K. EICHHORN
No. 11400758
STATE OF INDIANA
PROFESSIONAL ENGINEER

| DRAWN BY | JOB NUMBER |
|---|---|
| TS | 2017-271-B |
| CHECKED BY KE | |
| DATE MAY 10, 2019 | |
| SCALE AS SHOWN | |

SHEET
C8.6
CONSTRUCTION DETAILS

© 2019