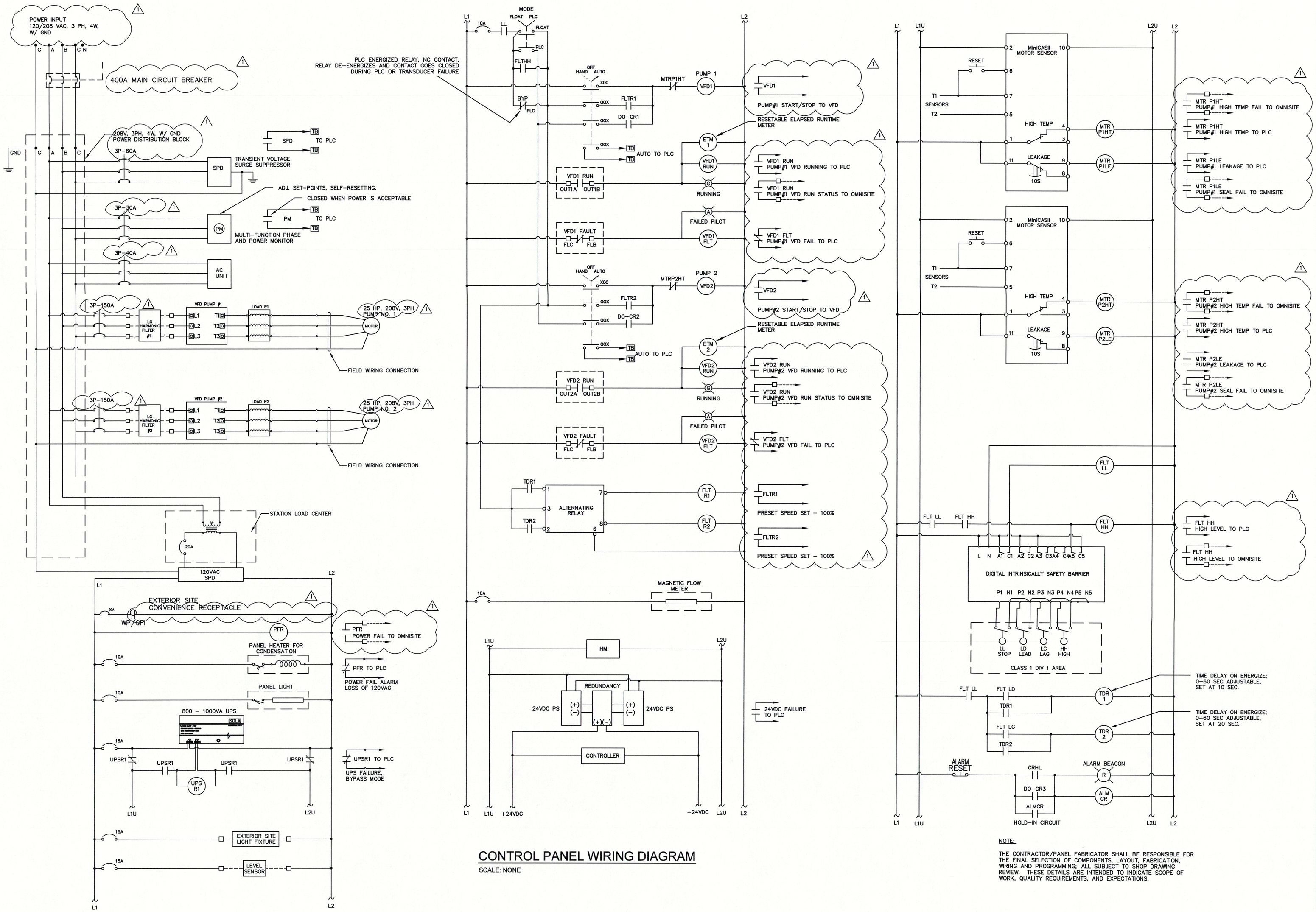

CONTROL PANEL WIRING DIAGRAM

SCALE: NONE

NOTE:

THE CONTRACTOR/PANEL FABRICATOR SHALL BE RESPONSIBLE FOR THE FINAL SELECTION OF COMPONENTS, LAYOUT, FABRICATION, WIRING AND PROGRAMMING; ALL SUBJECT TO SHOP DRAWING REVIEW. THESE DETAILS ARE INTENDED TO INDICATE SCOPE OF WORK, QUALITY REQUIREMENTS, AND EXPECTATIONS.

REVISIONS		
DATE	DESCRIPTION	BY
01/16/19	REV. PER FCRWD & IDEM COMMENTS	JEF

HWC ENGINEERING

SIMS-DURKIN ASSOCIATES ENGINEERING COMPANY
1545 COUNTRY CLUB ROAD INDIANAPOLIS, INDIANA 46234
PHONE: (317)209-4035 WEBSITE: WWW.SIMS-DURKIN.COM

SPRINGBROOK PRELIMINARY PLAN
MADISON COUNTY, INDIANA
LIFT STATION
PUMP CONTROL PANEL WIRING DIAGRAM

JEREMY E. FARMER REGISTERED No. PE11500233 STATE OF INDIANA PROFESSIONAL ENGINEER

DRAWN BY IA, SGM	JOB NUMBER 2017–271
CHECKED BY JEF	
DATE NOVEMBER 30, 2018	
SCALE AS SHOWN	
SHEET C5.10 PUMP CONTROL PANEL WIRING DIAGRAM	

© 2017