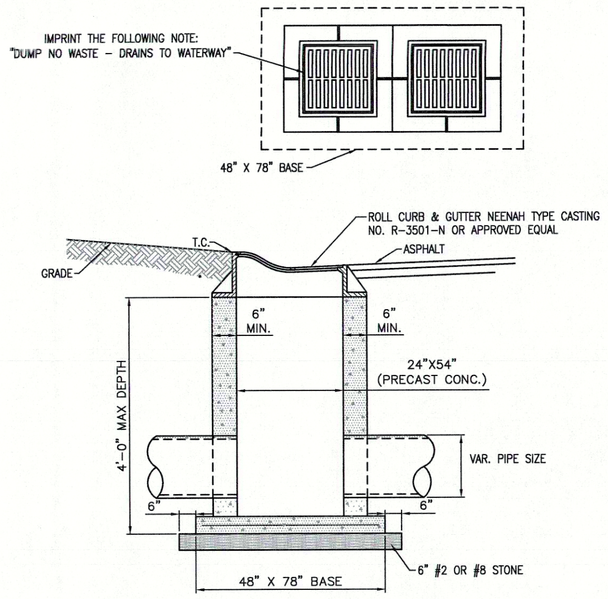

DOUBLE ROLL CURB INLET

NOT TO SCALE

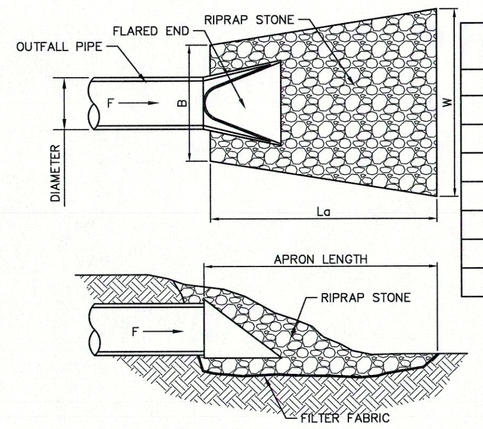

SIZE	B(ft)	La(ft)	W(ft)	Thickness(in)
12"	3	6	9	12"
15"	3.75	8	11.75	12"
18"	4.5	10	14.5	12"
24"	6	13	19	12"
27"	6.75	14	20.75	15"
30"	7.5	16	18.5	18"
36"	9	20	23	18"
42"	10.5	22	25.5	18"

RIP-RAP PLACEMENT

NOT TO SCALE

STANDARD DETAIL – MADISON COUNTY, INDIANA

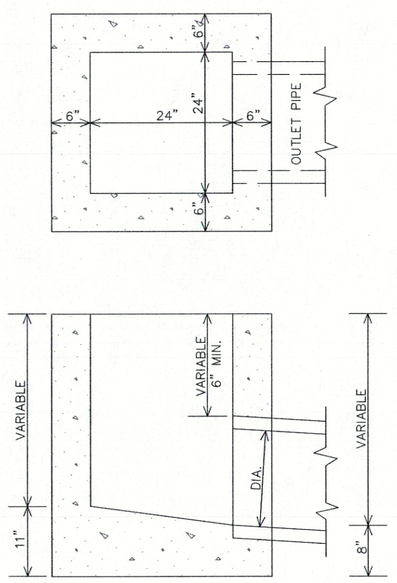

TYPE "A" INLET (MODIFIED)
(12" TO 18" PIPES)

DRAWING NOT TO SCALE

MADISON COUNTY HIGHWAY ENGINEER'S OFFICE

APPROVED: MADISON COUNTY ENGINEER DATE
APPROVED: MADISON COUNTY BOARD OF COMMISSIONERS DATE
REVISED:
STANDARD DETAIL

A-INLET-MODIFIED.DWG

E-8

GENERAL NOTE FOR ALL STORM STRUCTURES:
BENCH WALLS SHALL BE SHAPED AND FORMED FOR A CLEAN TRANSITION WITH PROPER HYDRAULICS TO ALLOW THE SMOOTH TRANSITION OF FLOWS THROUGH THE MANHOLE OR BOX INLET. THE BENCH WALL SHALL FORM A DEFINED CHANNEL TO A MINIMUM HEIGHT OF 80-PERCENT OF THE INSIDE DIAMETER OF THE INLET AND OUTLET PIPES TO FORM A "U" SHAPED CHANNEL, CONSTRUCTED AT A MINIMUM ½ INCH PER FOOT SLOPE TO THE MANHOLE WALL.

STANDARD DETAIL – MADISON COUNTY, INDIANA

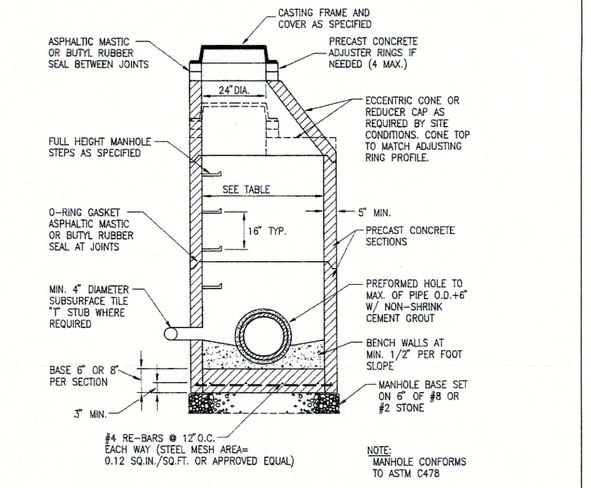

Pipe Size	Pipes entering or leaving at a 0-45 degree angle	Pipes entering or leaving at a 46-90 degree angle
12"-21"	48"	48"
24"	48"	60"
27" - 30"	60"	60"
33" - 36"	60"	72"

STORM MANHOLE FOR 12" THRU 24" PIPES

DRAWING NOT TO SCALE

MADISON COUNTY HIGHWAY ENGINEER'S OFFICE

APPROVED: MADISON COUNTY ENGINEER DATE
APPROVED: MADISON COUNTY BOARD OF COMMISSIONERS DATE
REVISED:
STANDARD DETAIL

12-24STORM-MH.DWG

E-1

STANDARD DETAIL – MADISON COUNTY, INDIANA

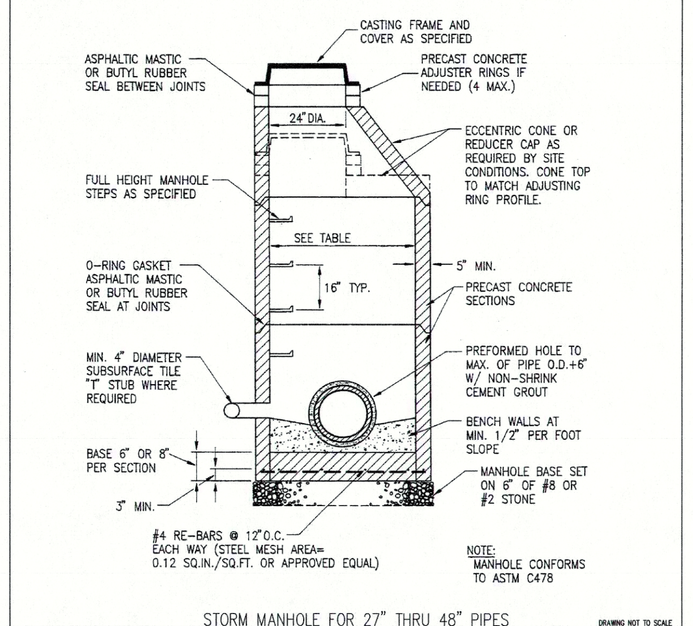

STORM MANHOLE FOR 27" THRU 48" PIPES

DRAWING NOT TO SCALE

MADISON COUNTY HIGHWAY ENGINEER'S OFFICE

APPROVED: MADISON COUNTY ENGINEER DATE
APPROVED: MADISON COUNTY BOARD OF COMMISSIONERS DATE
REVISED:
STANDARD DETAIL

27-48STORM-MH.DWG

E-2

STANDARD DETAIL – MADISON COUNTY, INDIANA

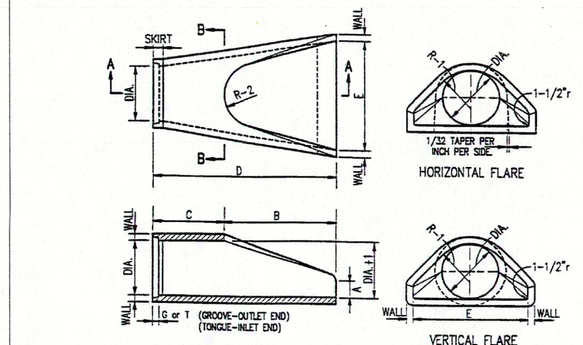

SECTION AA

SECTION BB

DIA.	WALL	C or T	WT.	SEC.	A	B	C	D	E	DIA.x.5	R-1	R-2	SKIRT
12	2	1-1/2	530	14	24	48	7 7/8	12 7/8	24	13	10 1/16	19	13 1/2
15	2 1/4	1/2	740	16	27	48	23	30	36	16	12 3/4	111	13 1/2
18	2 1/2	2 1/2	990	19	27	48	23	30	36	19	15 1/2	112	14
21	2 3/4	2 1/4	1280	19	33	48	36	23	42	22	18 1/8	113	14
24	3	2 1/2	1520	19 1/2	43 1/2	48	30	23 1/2	48	25	19 11/16	114	14 1/2
27	3 1/4	2 1/2	1830	10 1/2	48	48	25 1/2	23 1/2	54	28	17 3/4	114 1/2	14 1/2
30	3 1/2	3	2190	12	54	48	39 3/4	23 3/4	60	30	18 5/16	115	15
33	3 3/4	3 3/8	3150	13 1/2	58 1/2	48	39 1/4	37 3/4	66	34	23 3/4	117 1/2	15 1/2
36	4	3 1/2	4100	15	63	48	34 3/4	37 3/4	72	37	24 1/16	120	15 1/2
42	4 1/2	3 3/4	5380	21	63	48	30	48	78	43	27 1/4	122	15 1/2
48	5	4 1/4	6550	24	72	48	36	198	84	49	28 1/8	122	15 3/4
54	5 1/2	4 3/4	8040	27	65	48	35	100	90	55	32 7/8	124	16 1/4
60	6	5	9750	30	60	48	39	199	96	61	36 3/4	124	16 3/4
66	6 1/2	5 1/2	10630	24	78	48	21	199	102	67	33 11/16	124	17 1/4
72	7	6	12520	34	78	48	21	199	108	73	38 5/8	124	17 3/4
78	7 1/2	6 1/2	14430	34	78	48	21	199	114	79	41 13/16	124	18 1/2
84	8	7	16350	24	78	48	21	199	120	85	44 13/16	124	19

NOTES: 1. MANUFACTURE OF END SECTION IS IN ACCORDANCE WITH APPLICABLE PORTIONS OF A.S.T.M. SPECIFICATION C76.

CONCRETE END SECTION

DRAWING NOT TO SCALE

MADISON COUNTY HIGHWAY ENGINEER'S OFFICE

APPROVED: MADISON COUNTY ENGINEER DATE
APPROVED: MADISON COUNTY BOARD OF COMMISSIONERS DATE
REVISED:
STANDARD DETAIL

CONCRETEENDSECTION.DWG

E-24

STANDARD DETAIL – MADISON COUNTY, INDIANA

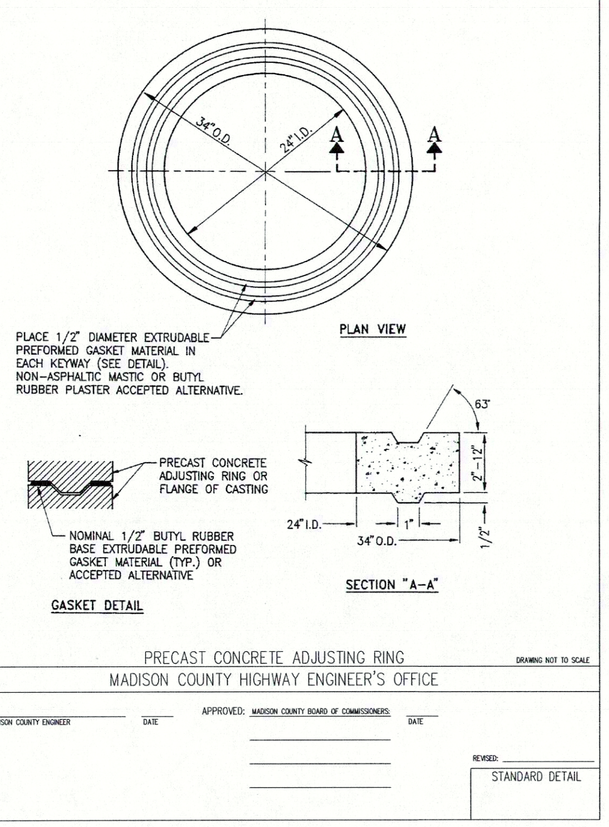

PRECAST CONCRETE ADJUSTING RING

DRAWING NOT TO SCALE

MADISON COUNTY HIGHWAY ENGINEER'S OFFICE

APPROVED: MADISON COUNTY ENGINEER DATE
APPROVED: MADISON COUNTY BOARD OF COMMISSIONERS DATE
REVISED:
STANDARD DETAIL

ADJ-RING.DWG

E-6

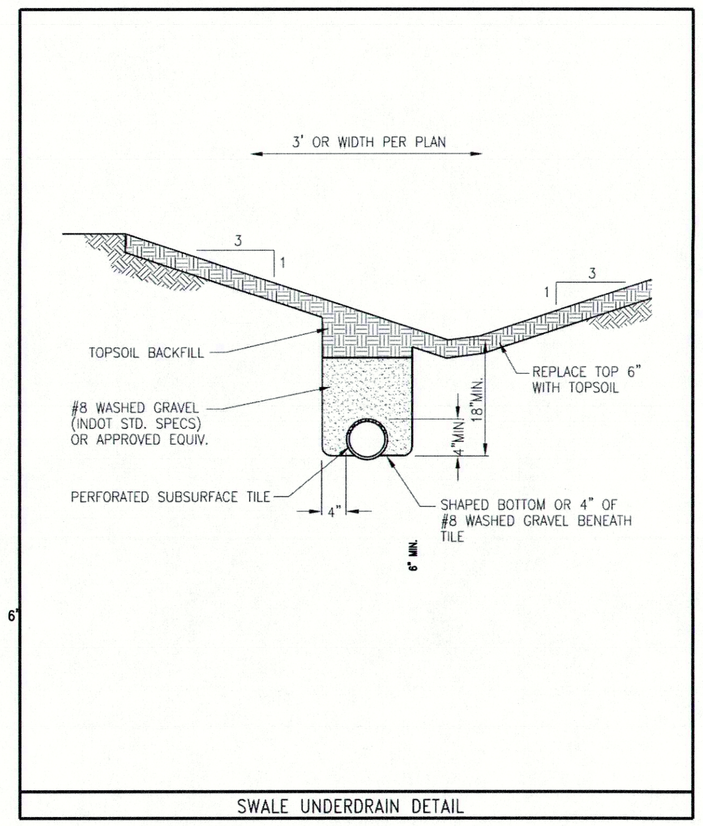

SWALE UNDERDRAIN DETAIL

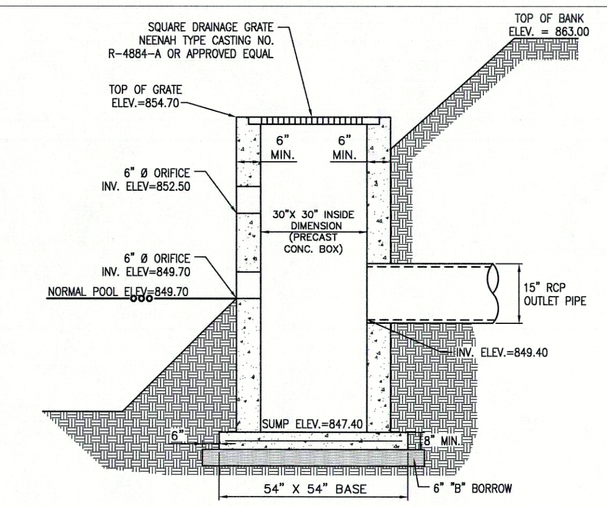

LAKE #1 OUTLET CONTROL STRUCTURE (STR.#108)

NOT TO SCALE

REVISIONS		
DATE	DESCRIPTION	BY
02/05/19	REVISIONS PER CLIENT AND COUNTY COMMENTS	HWC

HWC ENGINEERING
INDIANAPOLIS - TERRE HAUTE
LAFAYETTE - MUNICE - NEW ALBANY
www.hwcengineering.com

SPRINGBROOK SECTION 1A CONSTRUCTION DETAILS

SEAN M. DOWNEY REGISTERED No. 10200309 STATE OF INDIANA PROFESSIONAL ENGINEER

DRAWN BY TD	JOB NUMBER 2017-271-A
CHECKED BY SD	
DATE NOVEMBER 8, 2018	
SCALE AS SHOWN	
SHEET C8.2 CONSTRUCTION DETAILS	

© 2018

Plot Date: Feb 06, 2019 Plot Time: 7:24am File Name: W:\CoIAtlantic Homes\2017-271-A CoIAtlantic- Springbrook Sect 1\Design\CAD\17271-A.Construction Details.dwg, Layout: C8.2 By: sdowney