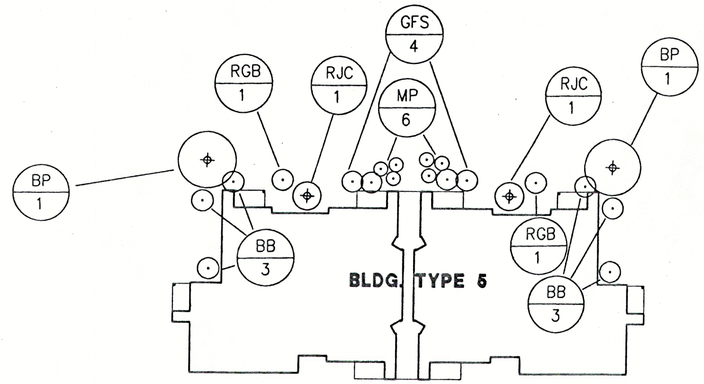

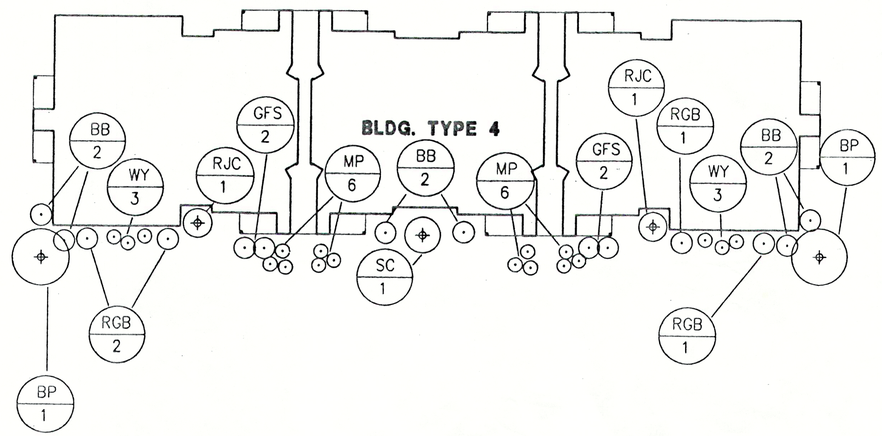

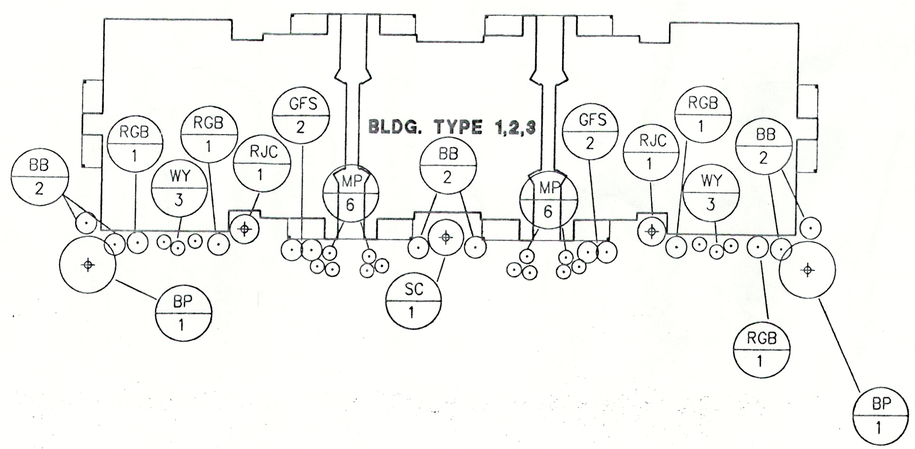

SCALE: 1"=20'

0 10 20 40'

PREPARED FOR:

PENDLETON PLACE APARTMENTS

SHEEHAN CONSTRUCTION CO., INC.

TYPICAL BUILDING LANDSCAPE PLAN

Part of the NE/4, Section 15, Twp. 18 North, Range 7 East, Fall Creek Twp., Madison County, Indiana

SHEET NO.

C8

WEIHE ENGINEERS, INC.

10505 NORTH COLLEGE AVENUE
INDIANAPOLIS, INDIANA 46280
(317) 846-4011 FAX: (317) 843-0548
TOLL-FREE (800) 455-6449

ALLAN H. WEIHE, P.E., L.S.
PRESIDENT
MICHAEL L. DeBOY, L.S.
VICE - PRESIDENT

CIVIL ENGINEERS • LAND SURVEYORS • LAND PLANNERS • LANDSCAPE ARCHITECTS

REVISIONS	DATE	BY
1	-	-

PROJECT NO.: 95-0036
DWG. NAME: 95-0036C.DWG
FIELD BY: C. Kendall
DRAWN BY: SMR/PRM
CHECKED BY: SMR/PRM
DATE: 23 MARCH 98
PAGE: T1-T7
FIELD BOOK: T77

ALLAN H. WEIHE REGISTERED No. 8827 STATE OF INDIANA PROFESSIONAL ENGINEER

ALLAN H. WEIHE P.E. 8827