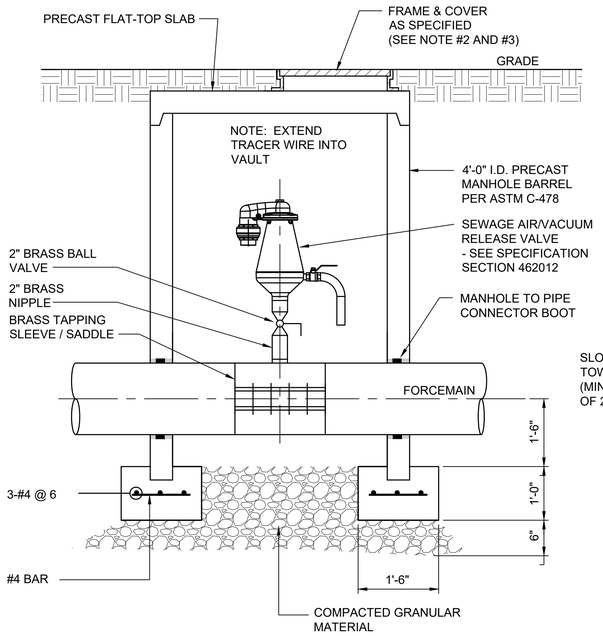


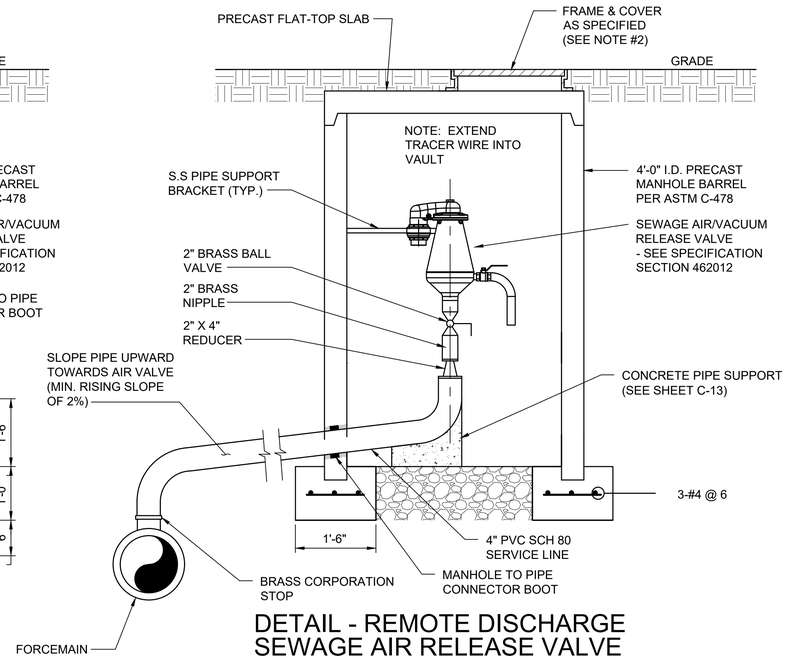


## DETAIL - REMOTE DISCHARGE SEWAGE AIR RELEASE VALVE

NOT TO SCALE

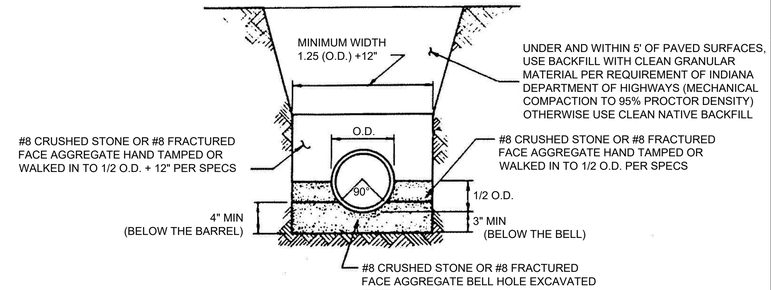


| PIPE SIZE | 8" TO 15" | 18" & OVER |
|---|---|---|
| BEDDING BELOW THE PIPE BARREL | O.D. / 4 MIN. = 4" | O.D. / 4 MAX. = 8" |

## FLEXIBLE PIPE BEDDING AND PRIMARY BACKFILL DETAIL - PVC AND HDPE PIPE (CITY STDS.)

NOT TO SCALE

### NOTES:

1. CONTRACTOR SHALL BE RESPONSIBLE FOR DETERMINING VALVE VAULT OVERALL HEIGHT WITH RESPECT TO FORCE MAIN DEPTH & AIR RELEASE VALVE & APPURTENANCES HEIGHT TO FACILITATE COMPLETE INSTALLATION AND MAINTAINING THE HIGH POINT ALONG THE FORCE MAIN FOR PROPER AIR RELEASE VALVE OPERATION.

2. CONTRACTOR SHALL INSTALL VAULT STRUCTURE AND FRAME & COVER OFFSET FROM AIR RELEASE VALVE INSTALLATION TO ALLOW FOR ACCESS WITHIN THE VAULT WITHOUT EQUIPMENT INTERFERENCE.

3. ACCEPTABLE MANUFACTURES ARE EAST JORDAN (MODEL 1045); NEENAH (MODEL R-1772) OR APPROVED EQUAL.

## DETAIL - SEWAGE AIR RELEASE VALVE VAULT

NOT TO SCALE

THIS RECORD DOCUMENT HAS BEEN PREPARED BASED ON INFORMATION PROVIDED BY THE CONSTRUCTION CONTRACTOR. GRW ENGINEERS, INC. HAS ATTEMPTED TO VERIFY THE ACCURACY AND/OR COMPLETENESS OF THIS INFORMATION BUT SHALL NOT BE RESPONSIBLE FOR ANY ERRORS OR OMISSIONS WHICH MAY BE INCORPORATED HEREIN AS A RESULT.

engineering | architecture | geospatial

ENGINEER/ARCHITECT: JOSEPH P. TIERNEY

CONSTRUCTION COMPANY: B.L. BROWN COSNTRUCTION

DATE: 08/29/2023

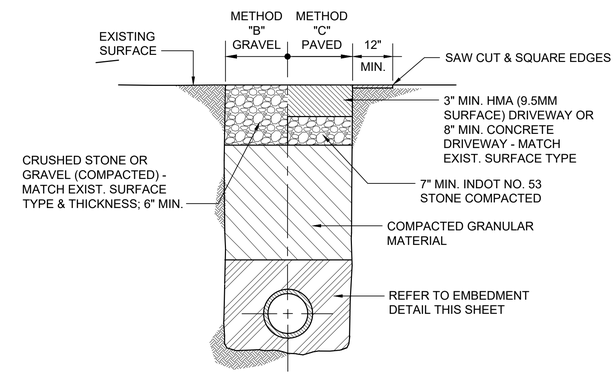


## METHODS "B" & "C" DRIVEWAYS

NOT TO SCALE

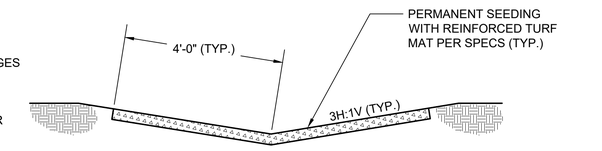


## DETAIL - V-DITCH & SWALE

NOT TO SCALE

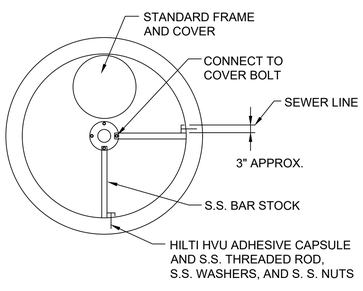


## AIR RELEASE VALVE PLAN VIEW

NOT TO SCALE

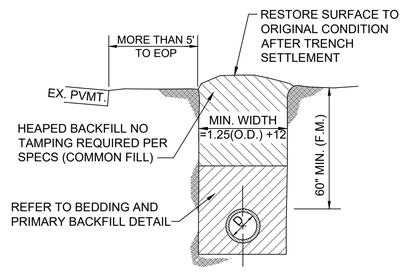


## OPEN TERRAIN - METHOD "A"

NOT TO SCALE

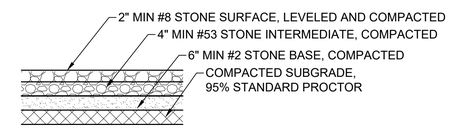


## GRAVEL AREA DETAIL AROUND LIFT STATION

NOT TO SCALE

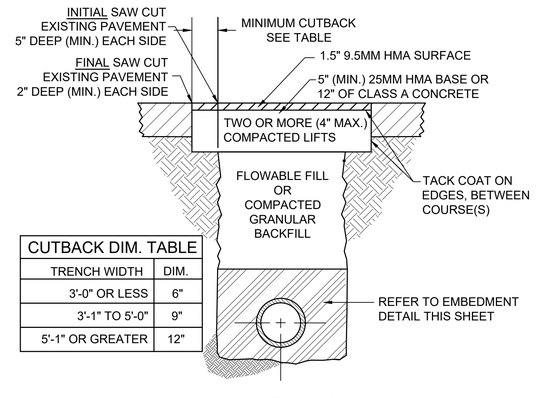


| CUTBACK DIM. TABLE | |
|---|---|
| TRENCH WIDTH | DIM. |
| 3'-0" OR LESS | 6" |
| 3'-1" TO 5'-0" | 9" |
| 5'-1" OR GREATER | 12" |

## METHOD "D" PAVED ROADS

NOT TO SCALE

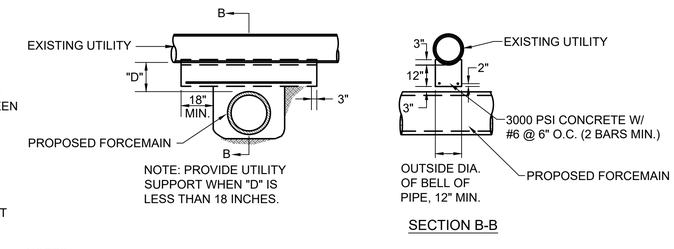


NOTES:
1. PROVIDE UTILITY SUPPORT WHEN "D" IS LESS THAN 12 INCHES.
2. EXISTING UTILITIES SHALL MEAN: STEEL GAS MAINS, WATER MAINS, ELECTRIC/TELEPHONE CONDUITS, FIBER OPTIC BANKS, SANITARY SEWER PIPING, STORM SEWER PIPING, ETC.

## DETAIL - UTILITY CROSSING (BELOW)

NOT TO SCALE

### AIR RELEASE VALVE VAULT NOTES:

1. AIR RELEASE VALVE VAULT SHALL BE LOCATED AT HIGH POINTS ALONG FORCEMAINS. EXACT LOCATION TO BE FIELD DETERMINED.

2. CONTRACTOR SHALL PROVIDE ALL NECESSARY ADAPTER FITTINGS, SADDLES, ETC. IN ACCORDANCE WITH PIPE MANUFACTURER'S RECOMMENDATIONS TO CONNECT TO NPT FITTINGS. CONTRACTOR SHALL SUBMIT CONNECTION SHOP DRAWINGS FOR ENGINEER'S REVIEW & APPROVAL.

3. CONTRACTOR IS RESPONSIBLE FOR DETERMINING VALVE VAULT OVERALL HEIGHT (MIN. 5'-0" FROM TOP OF FORCEMAIN) TO FACILITATE COMPLETE EQUIPMENT INSTALLATION.

4. AIR RELEASE VALVE SHALL BE ANCHORED TO VAULT WALL WITH (2) 2"x½" S.S. PIECES OF BAR STOCK PERPENDICULAR TO EACH OTHER TO PREVENT MOVEMENT OF VALVE PARALLEL AND PERPENDICULAR TO FORCEMAIN. S.S. BAR STOCK SHALL BE CONNECTED TO AIR RELEASE VALVE WITH COVER BOLT AND TO THE MANHOLE WALL USING HILTI HVU ADHESIVE CAPSULE OR APPROVED EQUAL WITH ALL S.S. COMPONENTS INCLUDING THREADED ROD, WASHERS AND NUTS. MINIMUM EMBEDMENT INTO CONCRETE SHALL BE 4". CONTRACTOR MAY SUBMIT ALTERNATE VALVE STABILAZATION PLAN WITH SHOP DRAWINGS FOR ENGINEER'S REVIEW AND APPROVAL.

This document, originally issued, sealed, and signed by Joseph P Tierney, Indiana Professional Engineer, No.19300407, on July 2022, shall not be used in lieu of a certified document.

RECORD DWG

GRW PROJECT NO. 4923

CLIENT PROJECT NO. --

ALL RIGHTS RESERVED
THIS DOCUMENT IS THE PROPERTY OF GRW ENGINEERS, INC. AND SHALL NOT BE REPRODUCED IN WHOLE OR IN PART OR USED FOR ANY PURPOSE OTHER THAN THE SPECIFIC PROJECT WITHOUT WRITTEN PERMISSION

engineering | architecture | geospatial

www.grwinc.com

STANDARD DETAILS I

---

NEW LIFT STATION AND FORCEMAIN
TOWN OF PENDLETON, INDIANA

| | |
|---|---|
| DESIGNED: | JPT |
| DRAWN: | AMR |
| REVIEWED: | JPT |
| APPROVED: | JPT |

REVISIONS

| NO. | DESCRIPTION: | DATE: | BY: |
|---|---|---|---|
| 1 | ADDENDUM #1 | 9/9/22 | LAD |

SCALE CHECK: THIS MARK SHOULD MEASURE EXACTLY 1" WHEN PLOTTED

DATE: JULY 2022

SCALE: N.T.S.

SHEET NO. C-12

PLOTTED BY: ARowley

PRINTED: 9/6/2023 @ 12:54PM

FILE NAME: G:\4923-FCRWD-SW\Working Drawings\AutoCAD\4923-C-12 DETS.dwg