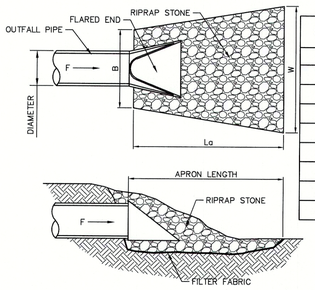

SIZE	B(ft)	La(ft)	W(ft)	Thickness(in)
12"	3	6	9	9"
15"	3.75	8	11.75	9"
18"	4.5	10	14.5	12"
21"	5.25	12	17.25	12"
24"	6	13	19	12"
27"	6.75	14	20.75	15"
30"	7.5	16	18.5	18"
36"	9	20	23	18"
42"	10.5	22	25.5	18"

RIP-RAP PLACEMENT

NOT TO SCALE

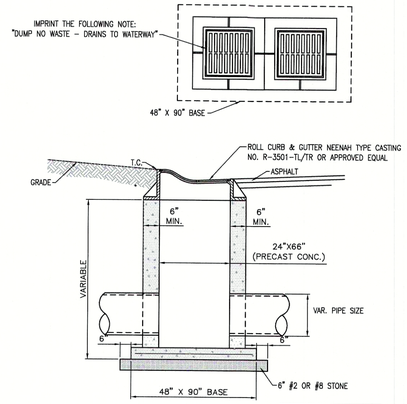

DOUBLE ROLL CURB INLET

NOT TO SCALE

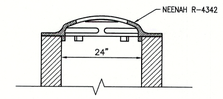

NEENAH R-4342 BEEHIVE STORM MANHOLE FRAME & GRATE

NOT TO SCALE

TABLE 404-02: MINIMUM MANHOLE DIAMETERS		
PIPE SIZE	PIPES ENTERING/ EXITING AT 0-45 DEGREES	PIPES ENTERING/ EXITING AT 45-90 DEGREES
12"-21"	48"	48"
24"	48"	60"
27"-30"	60"	60"
33"-36"	60"	72"

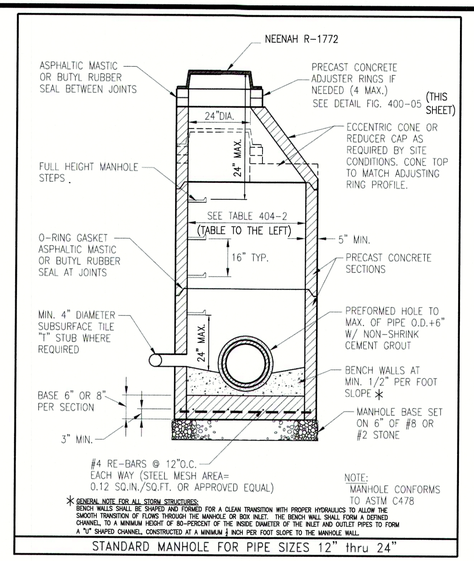

STANDARD MANHOLE FOR PIPE SIZES 12" thru 24"

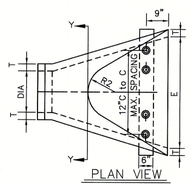

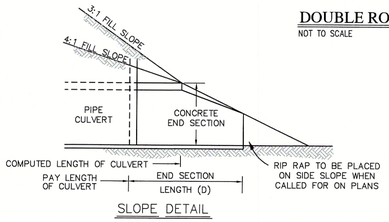

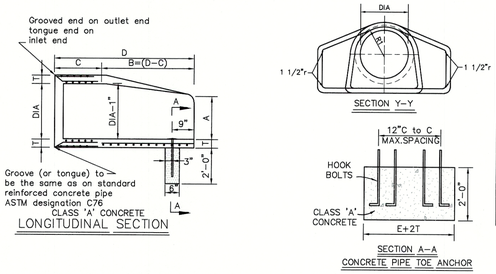

DIMENSIONS OF CONCRETE END SECTIONS FOR ROUND PIPE									
DIA	T (MIN)	A *	C *	D *	E *	K	R_1	R_2	APPROX. WEIGHT
12"	2"	5"	4'-3"	6'-2"	2'-0"	1.3	10 1/8"	9"	800
15"	2 1/4"	7"	4'-0"	6'-3"	2'-6"	1.5	12 1/2"	11"	1,100
18"	2 1/2"	11"	4'-1"	6'-2"	3'-0"	1.8	15 1/2"	12"	1,300
21"	2 3/4"	11"	3'-6"	6'-3"	3'-6"	2.1	16 1/8"	13"	1,500
24"	3"	1'-0"	2'-8"	6'-3"	4'-0"	2.3	16 3/16"	14"	1,800
27"	3 1/4"	1'-1"	2'-5"	6'-3"	4'-6"	2.6	18 1/2"	14 1/2"	2,100
30"	3 1/2"	1'-2"	1'-10"	6'-3"	5'-0"	2.9	18 3/16"	15"	2,400
33"	3 3/4"	1'-3"	3'-6"	8'-3"	5'-6"	3.1	18 1/2"	17 1/2"	4,100
36"	4"	1'-5"	3'-1"	8'-3"	6'-0"	3.4	23 3/4"	20"	4,200
48"	5"	2'-0"	2'-2"	8'-2"	7'-0"		28 1/8"	22"	6,500

* TOLERANCE +/- 1"

PRE CAST CONCRETE END SECTION

NOT TO SCALE

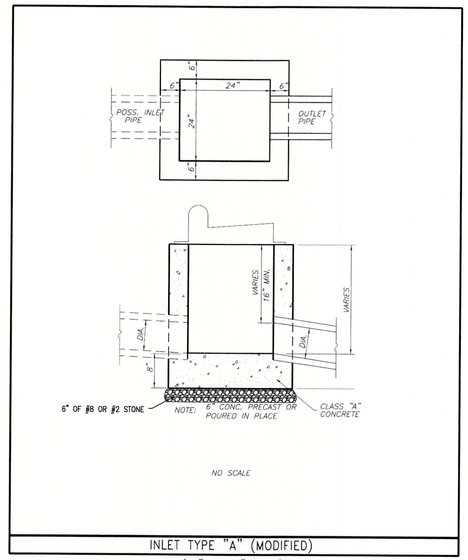

INLET TYPE "A" (MODIFIED)

(12" TO 18" PIPES)

GENERAL NOTE FOR ALL STORM STRUCTURES:
BENCH WALLS SHALL BE SHAPED AND FORMED FOR A CLEAN TRANSITION WITH PROPER HYDRAULICS TO ALLOW THE SMOOTH TRANSITION OF FLOWS THROUGH THE MANHOLE OR BOX INLET. THE BENCH WALL SHALL FORM A DEFINED CHANNEL, TO A MINIMUM HEIGHT OF 80-PERCENT OF THE INSIDE DIAMETER OF THE INLET AND OUTLET PIPES TO FORM A "U" SHAPED CHANNEL, CONSTRUCTED AT A MINIMUM ½ INCH PER FOOT SLOPE TO THE MANHOLE WALL.

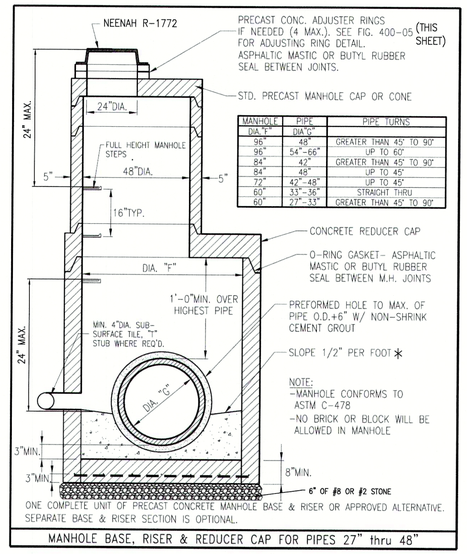

MANHOLE DIA."F"	PIPE DIA"G"	PIPE TURNS
96"	48"	GREATER THAN 45° TO 90°
96"	54"-66"	UP TO 60°
84"	42"	GREATER THAN 45° TO 90°
84"	48"	UP TO 45°
72"	42"-48"	UP TO 45°
60"	33"-36"	STRAIGHT THRU
60"	27"-33"	GREATER THAN 45° TO 90°

MANHOLE BASE, RISER & REDUCER CAP FOR PIPES 27" thru 48"

* GENERAL NOTE FOR ALL STORM STRUCTURES:
BENCH WALLS SHALL BE SHAPED AND FORMED FOR A CLEAN TRANSITION WITH PROPER HYDRAULICS TO ALLOW THE SMOOTH TRANSITION OF FLOWS THROUGH THE MANHOLE OR BOX INLET. THE BENCH WALL SHALL FORM A DEFINED CHANNEL, TO A MINIMUM HEIGHT OF 80-PERCENT OF THE INSIDE DIAMETER OF THE INLET AND OUTLET PIPES TO FORM A "U" SHAPED CHANNEL, CONSTRUCTED AT A MINIMUM ½ INCH PER FOOT SLOPE TO THE MANHOLE WALL.

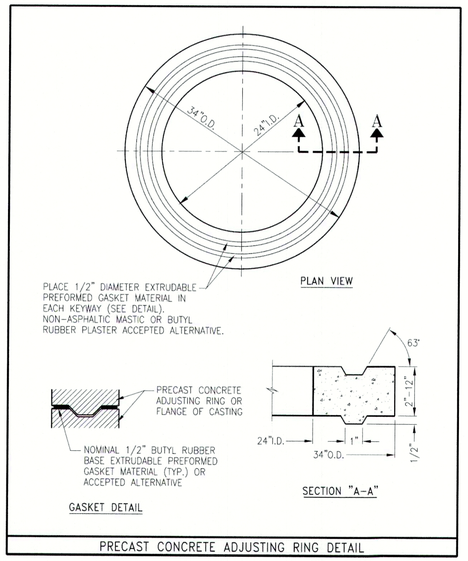

PRECAST CONCRETE ADJUSTING RING DETAIL

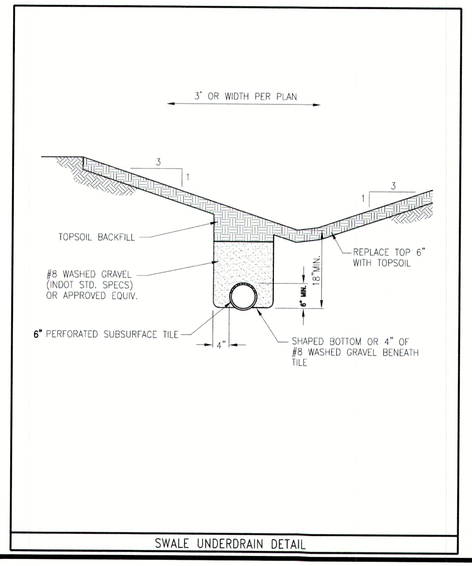

SWALE UNDERDRAIN DETAIL

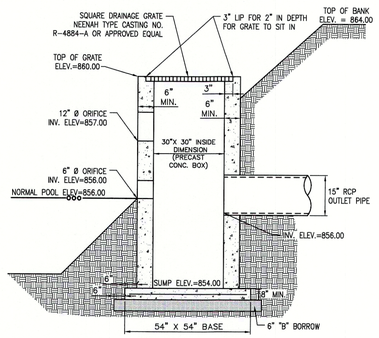

LAKE #2 OUTLET CONTROL STRUCTURE (STR #318)

NOT TO SCALE

REVISIONS		
DATE	DESCRIPTION	BY

HWC ENGINEERING
INDIANAPOLIS - TERRE HAUTE
LAFAYETTE - MUNICE - NEW ALBANY
www.hwcengineering.com

MAPLE TRAILS SECTION 5
INGALLS, INDIANA
CONSTRUCTION DETAILS

PRELIMINARY NOT FOR CONSTRUCTION

CHRISTOPHER K. EICHHORN REGISTERED No. 11400758 STATE OF INDIANA PROFESSIONAL ENGINEER

Kristopher K. Eichhorn

DRAWN BY TD/TS/GM	JOB NUMBER 2017-095-E
CHECKED BY KE	
DATE DECEMBER 18, 2020	
SCALE AS SHOWN	
SHEET C8.2 CONSTRUCTION DETAILS	

© 2020

Plot Date: Dec 17, 2020 Plot Time: 10:49pm File Name: W:\Arbor Homes\2017-095-E Arbor- Maple Trails Sec 5\Design\CAD\17095E Construction Details.dwg, Layout: C8.2 By: tsmith