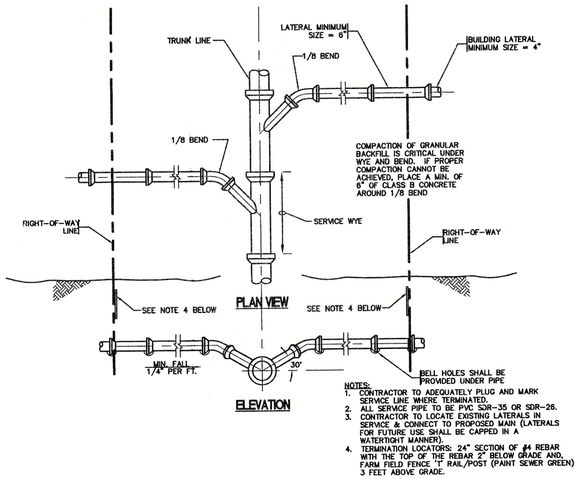

NOTES:
1. CONTRACTOR TO ADEQUATELY PLUG AND MARK SERVICE LINE WHERE TERMINATED.
2. ALL SERVICE PIPE TO BE PVC SDR-35 OR SDR-26.
3. CONTRACTOR TO LOCATE EXISTING LATERALS IN SERVICE & CONNECT TO PROPOSED MAIN (LATERALS FOR FUTURE USE SHALL BE CAPPED IN A WATERTIGHT MANNER).
4. TERMINATION LOCATORS: 24" SECTION OF #4 REBAR WITH THE TOP OF THE REBAR 2" BELOW GRADE AND, FARM FIELD FENCE "T RAIL/POST (PAINT SEWER GREEN) 3 FEET ABOVE GRADE.

1 SERVICE CONNECTION DETAIL

SCALE: N.T.S.

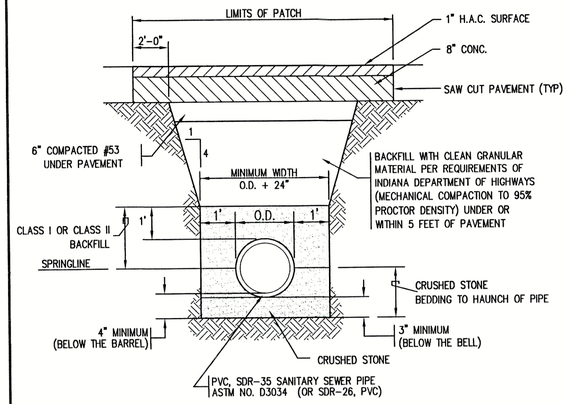

NOTES:
1. BITUMINOUS PAVEMENT TACK COAT SHALL BE PLACED BETWEEN THE CONCRETE SUBSURFACE AND ALONG THE SAW CUTS.
2. FORCEMAIN INSTALLATION TO UTILIZE CLEAN SAND IN LIEU OF #8 STONE BEDDING AND BACKFILL TO 12" ABOVE TOP OF PIPE.
3. THIS SECTION USED FOR ALL PAY ITEMS.
4. CONTRACTOR TO MEET ALL APPLICABLE O.S.H.A. STANDARDS FOR SAFTEY DURING CONSTRUCTION.
5. CONTRACTOR SHALL PROVIDE ALL SHORING, BRACING, ETC. REQUIRED TO PROTECT EXISTING STRUCTURES AND PAVEMENT.

2 TYPICAL TRENCH AND PAVEMENT PATCH DETAIL

SCALE: N.T.S.

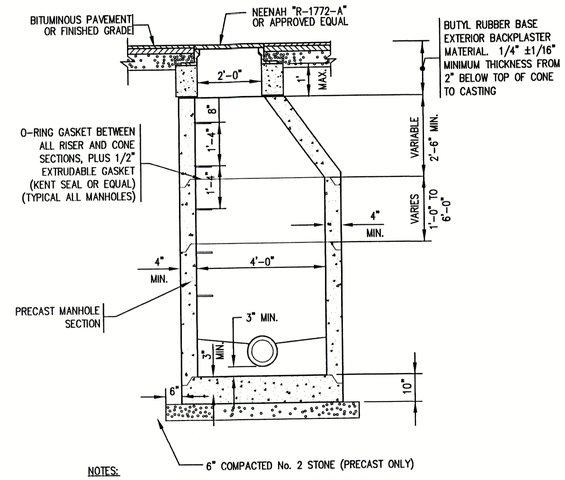

NOTES:
1. MANHOLE STEPS SHALL BE POLYPROPYLENE, POLYPROPYLENE COATED STEEL REINFORCING OR APPROVED NON-CORROSIVE FIBERGLASS MATERIAL. COPOLYMER POLYPROPYLENE SHALL MEET ASTM D-4101 REINFORCED WITH DEFORMED 3/8" STEEL MEETING ASTM A-615, GRADE 60.
2. MANHOLE CONFORMS TO ASTM C-478
JOINT CONFORMS TO ASTM C-443

3 SANITARY MANHOLE

SCALE: N.T.S.

RECORD DRAWING

February 15, 2001

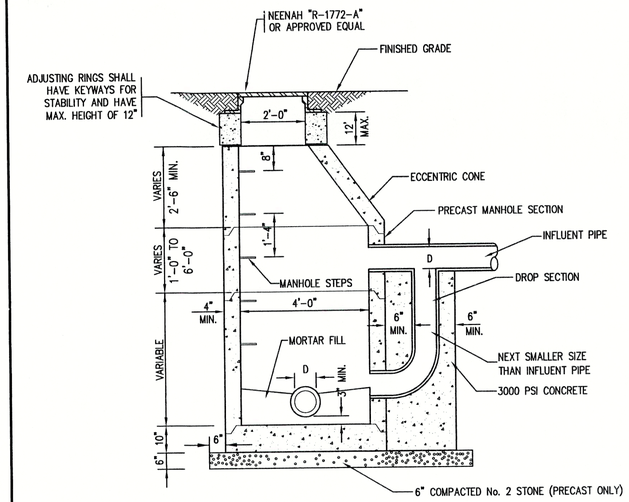

4 DROP MANHOLE

SCALE: N.T.S.

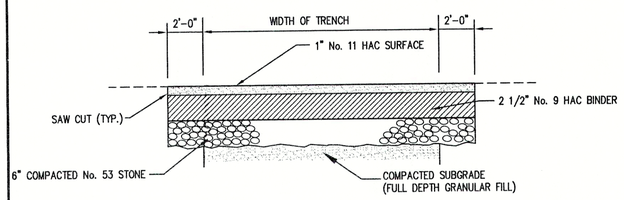

5 ASPHALT DRIVE REPAIR DETAIL

SCALE: N.T.S.

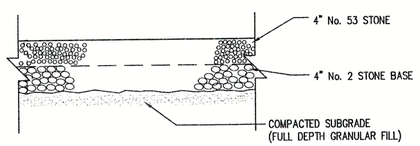

6 STONE DRIVE REPAIR DETAIL

SCALE: N.T.S.

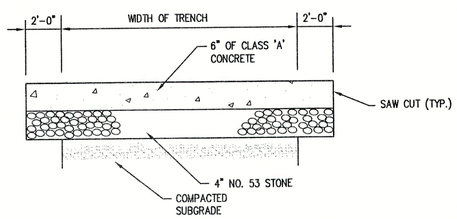

7 CONCRETE DRIVE REPAIR DETAIL

SCALE: N.T.S.

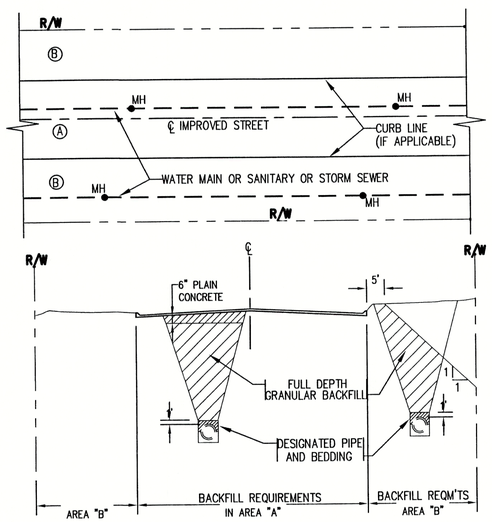

8 BACKFILL REQUIREMENTS

(FOR PIPELINES WITHIN RIGHT-OF-WAY FOR IMPROVED STREETS)

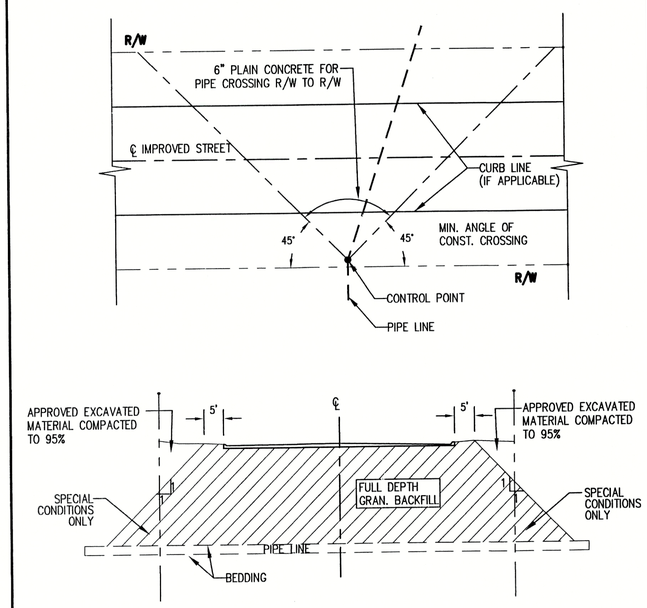

9 BACKFILL REQUIREMENTS

(FOR PIPELINES CROSSING RIGHT-OF-WAY FOR IMPROVED STREETS)

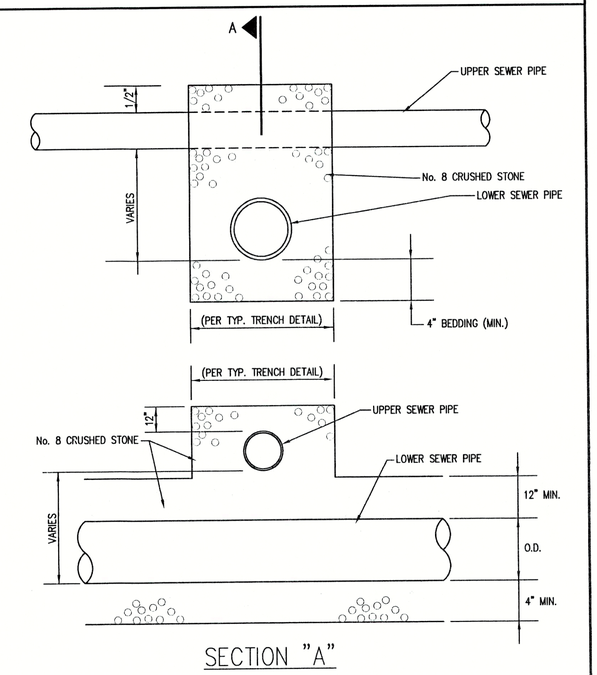

10 STORM SEWER/SANITARY SEWER CROSSING DETAIL

SCALE: N.T.S.

FILE NAME: YORK_DT1-RD	PLOT SCALE: 1=1	PLOT DATE: 11/14	
NO.	DATE	DESCRIPTION	BY

TRIAD ASSOCIATES INC.
INDIANAPOLIS, INDIANA

APPROVED BY: THOMAS W. SCHUBERT REGISTERED No. 15614 STATE OF INDIANA PROFESSIONAL ENGINEER
Thomas M. Schubert, P.E.

DIVISION II – CONTRACT 'E'
FALL CREEK REGIONAL WASTE DISTRICT

STANDARD SANITARY SEWER DETAILS

DRAWN BY: DAP	DATE 04/12/98	PROJECT No. 98008A	SHEET No. 18
	SCALE AS NOTED		OF 19
DESIGNED BY: D.A. Pauling			
CHECKED BY: James W. Frazell, P.E.			

C:\Dwg\harsh\YORK\Record\york_dt1-RD.dwg, 11/14/01 12:12:54 PM, 1:1